625-EMD-017

EOSDIS Maintenance and Development Project

Training Material for the EMD Project Volume 17: System Troubleshooting

Revision 01

July 2005

Raytheon Company
Upper Marlboro, Maryland

Training Material for the EMD Project
Volume 17: System Troubleshooting

Revision 01

July 2005

Prepared Under Contract NAS5-03098
CDRL Item 23

RESPONSIBLE AUTHOR

Ralph E. Fuller Date
EOSDIS Maintenance and Development Project

RESPONSIBLE OFFICE

Mary Armstrong, Program Manager Date
EOSDIS Maintenance and Development Project

Raytheon Company
Upper Marlboro, Maryland

This page intentionally left blank.

Preface

This document is a formal contract deliverable. It requires Government review and approval within 45 business days. Changes to this document will be made by document change notice (DCN) or by complete revision.

Any questions should be addressed to:

Data Management Office
The EMD Project Office
Raytheon Company
1616 McCormick Drive
Upper Marlboro, Maryland 20774-5301

Revision History

Document Number	Status/Issue	Publication Date	CCR Number
625-EMD-017	Original	April 2004	
625-EMD-017	Revision 01	July 2005	

This page intentionally left blank.

Abstract

This is Volume 17 of a series of lessons containing the training material for the Earth Observing System Data and Information System (EOSDIS) Maintenance and Development (EMD) Project. This lesson provides a detailed description of the different tasks that are required to perform system troubleshooting. The lesson includes a detailed review of the system monitoring capabilities, hardware and software troubleshooting process, and trouble ticket set-up and processing.

***Keywords**:* training, instructional design, course objective, system troubleshooting, trouble ticket, WhatsUp Gold, Whazzup, maintenance, Inventory/Logistical Management (ILM) tool

This page intentionally left blank.

Contents

Preface

Abstract

Introduction

Identification 1

Scope 1

Purpose 1

Status and Schedule 1

Organization 1

Related Documentation

Parent Documents 3

Applicable Documents 3

Information Documents 3

Information Documents Referenced 3

Information Documents Not Referenced 4

System Troubleshooting Overview

Lesson Overview 7

Lesson Objectives 7

Importance 9

Configuration Parameters

Configuration Registry 11
General Configuration Parameters 11

System Performance Monitoring

Accessing the EOS Mission Support Network (EMSn) Web Page 15
Log in to System Hosts 16
Checking the Health and Status of the Network 18
WhatsUp Gold 18
Launching WhatsUp Gold and Displaying The Network Map 19
Responding to Color Alerts and Obtaining Status of a Node 20
Configuring a Popup Menu for a Node or Multiple Nodes 23
Using Network Tools 26
Using WhatsUp Gold Logs 33
Whazzup???, ECS Health Check GUI, and ECS Assistant/Monitor 35
Starting Whazzup and Monitoring the Status of Hosts and Servers 38
ECS Health Check GUI 39
Starting and Using the ECS Health Check GUI 39
ECS Assistant and ECS Monitor 44

Problem Analysis/Troubleshooting

Analysis/Troubleshooting: System 49
Analysis/Troubleshooting: COTS Hardware 50
The ILM Tool 50
Performing Preventive Maintenance 65
Analysis/Troubleshooting: COTS Software 65
COTS Software Licenses 66
Installing COTS Software 66
Safeguarding COTS Software Media 67
Obtaining COTS Software Support 67

Troubleshooting of Custom Software

Implementation of Modifications 71

Obtaining Custom Software Support 72

General System Troubleshooting 73

Using WhatsUp Gold, Whazzup, ECS Monitor, and EcCsIdPingServers Script to Check the Status of Hosts and Servers 82

Checking Server Log Files 84

A Special Case: Checking the Request Manager Server Debug Log 94

Changing Debug Levels for Server Logs 105

Recovering from a Connectivity Problem 106

Recovering from a Database Access Problem 110

Recovering from a Missing Mount Point or Other File Access Problem 111

Recovering from a Subscription Server/NBSRV Problem 111

Recovering from Granule Insertion Problems 117

Handling an Acquire Failure 121

Recovering from Ingest Problems 126

Recovering from PDPS Plan Creation/Activation and PGE Problems 127

Recovering from QA Monitor Problems 129

Recovering from Problems with ESDTs or SSI&T 131

Recovering from Problems with Data Search and Order 134

Recovering from Problems with Data Pool 139

Recovering from Data Distribution Problems 146

Recovering from Problems with Submission of an ASTER Data Acquisition Request (LP DAAC Only) 149

Recovering from Problems with On-Demand Product Requests (LP DAAC Only) 152

Trouble Ticket (TT)

Using Problem Report Software 157

Launching Remedy Forms and Tools 160

Adding Users to Remedy 163

Changing Privileges in Remedy 165
Generating Trouble Ticket Reports 169
Performing Operational Work-around 172

Practical Exercise

Introduction 175
Equipment and Materials 175
Perform Activities Related to System Monitoring and Troubleshooting 175

Slide Presentation

Slide Presentation Description 177

Introduction

Identification

Training Material Volume 17 is part of Contract Data Requirements List (CDRL) Item 23, which is a required deliverable under the Earth Observing System Data and Information System (EOSDIS) Maintenance and Development (EMD) Contract (NAS5-03098).

Scope

Training Material Volume 17 describes the process and procedures for System Troubleshooting. This lesson is designed to provide the operations staff with sufficient knowledge and information to satisfy all lesson objectives.

Purpose

The purpose of this Student Guide is to provide a detailed course of instruction that forms the basis for understanding system troubleshooting. Lesson objectives are developed and will be used to guide the flow of instruction for this lesson. The lesson objectives will serve as the basis for verifying that all lesson topics are contained within this Student Guide and slide presentation material.

Status and Schedule

This lesson module provides detailed information about training for the current baseline of the system. Revisions are submitted as needed.

Organization

This document is organized as follows:

Introduction:	The Introduction presents the document identification, scope, purpose, and organization.
Related Documentation:	Related Documentation identifies parent, applicable and information documents associated with this document.
Student Guide:	The Student Guide identifies the core elements of this lesson. All Lesson Objectives and associated topics are included.
Slide Presentation:	Slide Presentation is reserved for all slides used by the instructor during the presentation of this lesson.

This page intentionally left blank.

Related Documentation

Parent Documents

The parent documents are the documents from which the EMD Training Material's scope and content are derived.

423-41-01	Goddard Space Flight Center, EOSDIS Core System (ECS) Statement of Work
423-46-03	EMD Task 101 Statement of Work For ECS SDPS Maintenance
423-46-02	Contract Data Requirements Document for EMD Task 101 ECS SDPS Maintenance

Applicable Documents

The following documents are referenced within this EMD Training Material, or are directly applicable, or contain policies or other directive matters that are binding upon the content of this document:

420-05-03	Goddard Space Flight Center, Earth Observing System (EOS) Performance Assurance Requirements for the EOSDIS Core System (ECS)
423-41-02	Goddard Space Flight Center, Functional and Performance Requirements Specification for the Earth Observing System Data and Information System (EOSDIS) Core System (ECS) (ECS F&PRS)
423-46-01	Goddard Space Flight Center, Functional and Performance Requirements Specification for the Earth Observing System Data and Information System (EOSDIS) Core System (ECS) Science Data Processing System (EMD F&PRS)

Information Documents

Information Documents Referenced

The following documents are referenced herein and amplify or clarify the information presented in this document. These documents are not binding on the content of the EMD Training Material.

609-EMD-001	Release 7.10 Operations Tools Manual for the EMD Project
611-EMD-001	Release 7.10 Mission Operation Procedures for the EMD Project
910-TDA-005	Site-Host Map Report
910-TDA-022	Custom Code Configuration Parameters for ECS

920-TD*x*-009	DAAC HW Database Mapping
920-TDx-019	Hosts' Custom Code Baseline
914-TDA-246	WhatsUp Gold 8.0 Maintenance Upgrade for the ECS Project: Release Notes

Information Documents Not Referenced

The following documents, although not referenced herein and/or not directly applicable, do amplify or clarify the information presented in this document. These documents are not binding on the content of the EMD Training Material.

305-EMD-001	Release 7.10 Segment/Design Specification for the EMD Project
311-EMD-001	Release 7.10 Data Management Subsystem (DMS) Database Design and Database Schema Specifications for the EMD Project
311-EMD-002	Release 7.10 INGEST (INS) Database Design and Schema Specifications for the EMD Project
311-EMD-003	Release 7.10 Planning and Data Processing Subsystem Database Design and Schema Specifications for the EMD Project
311-EMD-004	Release 7.10 Science Data Server Database Design and Schema Specifications for the EMD Project
311-EMD-005	Release 7.10 Storage Management and Data Distribution Subsystems Database Design and Database Schema Specifications for the EMD Project
311-EMD-006	Release 7.10 Subscription Server Database Design and Schema Specifications for the EMD Project
311-EMD-007	Release 7.10 Systems Management Subsystem Database Design and Schema Specifications for the EMD Project
311-EMD-008	Release 7.10 Registry Database Design and Schema Specifications for the EMD Project
311-EMD-009	Release 7.10 Product Distribution Subsystem (PDS) Database Design and Database Schema Specifications for the EMD Project
311-EMD-010	Release 7.10 NameServer Database Design and Schema Specifications for the EMD Project
311-EMD-011	Release 7.10 Order Manager Database Design and Database Schema Specifications for the EMD Project
311-EMD-012	Release 7.10 Spatial Subscription Server (SSS) Database Design and Schema Specifications for the EMD Project
311-EMD-013	Release 7.10 Data Pool Database Design and Schema Specifications for the EMD Project
313-EMD-001	Release 7.10 Internal Interface Control Document for the EMD Project

508-EMD-001	ACRONYMS for the EOSDIS Maintenance and Development (EMD) Project
152-TP-003	Glossary of Terms for the EOSDIS Core System (ECS) Project

This page intentionally left blank.

System Troubleshooting Overview

Lesson Overview

This lesson will provide you with the process for system/performance monitoring, problem analysis and troubleshooting of system hardware and software, and administration of the trouble ticket system. It provides practical experience in using the tools you will need for resolving system problems and minimizing system down time.

Lesson Objectives

Overall Objective - The overall objective of this lesson is proficiency in the methodology and procedures for system troubleshooting of the Earth Observing System Data and Information System (EOSDIS) Core System (ECS).

Condition - The student will be given a copy of 611-EMD-001, *Release 7.10 Mission Operation Procedures for the EMD Project*, a copy of 609-EMD-001, *Release 7.10 Operations Tools Manual for the EMD Project*, and a workstation console with access to system software tools including Trouble Ticket, Fault/Performance Management, WhatsUp Gold, Whazzup???, ECS Assistant/Monitor, and Management Services Subsystem (MSS) graphical user interface (GUI) tools.

Standard - The student will use the tools in accordance with prescribed methods and complete required procedures without error.

Specific Objective 1 - The student will describe the role of configuration parameters in the system and explain the use and purpose of the Configuration Registry database and Graphical User Interface (GUI).

Condition - The student will be given a copy of 611-EMD-001, *Release 7.10 Mission Operation Procedures for the EMD Project*, a copy of 609-EMD-001, *Release 7.10 Operations Tools Manual for the EMD Project*, and a workstation console with access to system software.

Standard - The student will use correctly state the dependence of server configurations on the values of configuration parameters stored in the Configuration Registry database and identify the Configuration Registry GUI as the means of making configuration parameter changes that are authorized by Configuration Management.

Specific Objective 2 - The student will conduct system performance monitoring, to include using WhatsUp Gold to check the health and status of the network, using the ECS Health Check GUI to monitor the status of the EcDmV0ToEcsGateway and the Data Pool, and using the EOSDIS Backbone Network (EMSn) Web Page to identify EMSn problems.

Condition - The student will be given a copy of 611-EMD-001, *Release 7.10 Mission Operation Procedures for the EMD Project*, a copy of 609-EMD-001, *Release 7.10 Operations Tools Manual for the EMD Project*, and a workstation console with access to system software.

Standard - The student will use Whazzup, ECS Health Check GUI, and ECS Monitor in accordance with specified procedures and without error to monitor/check the status of system components.

Specific Objective 3 - The student will perform problem analysis and troubleshooting, to include analysis and troubleshooting of the system, analysis and troubleshooting of commercial off-the-shelf (COTS) hardware and software.

Condition - The student will be given a copy of 611-EMD-001, *Release 7.10 Mission Operation Procedures for the EMD Project*, a copy of 609-EMD-001, *Release 7.10 Operations Tools Manual for the EMD Project*, and a workstation console with access to system software tools including Trouble Ticket, Fault/Performance Management, WhatsUp Gold, Whazzup???, ECS Assistant/Monitor, and Management Services Subsystem (MSS) graphical user interface (GUI) tools.

Standard - The student will use the GUI tools without error in accordance with applicable procedures to perform the required troubleshooting and maintenance activities.

Specific Objective 4 - The student will use the Inventory/Logistical Management (ILM) tool to prepare a maintenance work order and a maintenance work order modification.

Condition - The student will be given a copy of 611-EMD-001, *Release 7.10 Mission Operation Procedures for the EMD Project*, a copy of 609-EMD-001, *Release 7.10 Operations Tools Manual for the EMD Project*, and a workstation console with access to system software tools including the ILM tool.

Standard - The student will use the ILM tool without error in accordance with applicable procedures to prepare the required work order and work order modification.

Specific Objective 5 - The student will perform the procedures required for switchover from a failed primary processor to a backup processor and switch back to the primary processor upon its return to service.

Condition - The student will be given a copy of 611-EMD-001, *Release 7.10 Mission Operation Procedures for the EMD Project*, and workstation consoles with access to system software tools.

Standard - The student will perform the necessary procedures without error and complete the initial switchover in less than 30 minutes.

Specific Objective 6 - The student will perform the procedures required for general check out and diagnosis of failures related to operations with custom software.

Condition - The student will be given troubleshooting procedures, a copy of 611-EMD-001, *Release 7.10 Mission Operation Procedures for the EMD Project*, a copy of 609-EMD-001, *Release 7.10 Operations Tools Manual for the EMD Project*, and a workstation console with access to system software tools including Trouble Ticket, Fault/Performance Management, WhatsUp Gold, Whazzup???, ECS Assistant/Monitor, and Management Services Subsystem (MSS) graphical user interface (GUI) tools.

Standard -The student will use the information and available tools without error in accordance with applicable procedures to perform the required troubleshooting activities.

Specific Objective 7 - The student will perform the functions required to set up and manage trouble ticket processing, including administrative set-up of user accounts and privileges in the trouble ticket software.

Condition - The student will be given a copy of 611-EMD-001, *Release 7.10 Mission Operation Procedures for the EMD Project*, a copy of 609-EMD-001, *Release 7.10 Operations Tools Manual for the EMD Project*, a workstation console with access to system software tools including Trouble Ticket, Fault/Performance Management, WhatsUp Gold, Whazzup???, ECS Assistant/Monitor, and Management Services Subsystem (MSS) graphical user interface (GUI) tools, and a personal computer with the Remedy Administration tool installed.

Standard - The student will use the GUI tools without error in accordance with applicable procedures to perform the required trouble ticket functions.

Importance

This lesson provides students with the knowledge and skills needed for effective system troubleshooting and maintenance of the system. It is structured to provide useful skills and knowledge concerning system operation and the tools for identifying system problems and returning malfunctioning system hardware and software to normal operational status. It provides useful instruction and practical exercises in maintaining the system in an operationally ready condition, and is therefore vital to students who are preparing for a number of different positions with responsibilities in maintaining that system readiness, including positions as:

- DAAC Computer Operator, System Administrator, and Maintenance Coordinator.
- EMD Project System Engineer, System Test Engineer, System Administrator, and Software Maintenance Engineer.
- DAAC System Engineer, System Test Engineer, and Software Maintenance Engineer.

This page intentionally left blank.

Configuration Parameters

There are many configurable parameters associated with system software. Some of them are set by default to values that may be appropriate for most operating conditions. Others may be set to values that may or may not be appropriate for the requirements of operations at a particular DAAC. Some parameters may be changed using system Graphical User Interfaces (GUIs) designed to monitor and control functions related to particular subsystems. Others may require changes to a configuration file (i.e., edit the file using UNIX vi editor) or database (typically done by the Database Administrator). ***Note: Before changing any configuration parameter, make certain either that it is not under configuration control or that you have obtained any necessary approval specified in local Configuration Management policies and procedures.***

Configuration Registry

System configuration parameters are manageable by a *Configuration Registry*. The Configuration Registry Server provides a single interface to retrieve configuration attribute-value pairs for system servers from the Registry Database, via a Sybase Server. The Configuration Registry Server maintains an internal representation of the tree in which configuration attribute-value pairs are stored. General configuration parameters used by many servers are stored in higher nodes in the tree. Parameters specific to a single system server are contained in the leaf nodes of the tree. A script tool has been provided for loading the Configuration Registry database from data in configuration files. Once the Configuration Registry is loaded, if the configuration files are moved or otherwise made inaccessible to the software, the software goes to the Configuration Registry to obtain needed configuration parameters. There is also a Configuration Registry GUI to view and edit configuration data. Changes to the Configuration Registry typically are under the control of the Database Administrator and Configuration Management. Although the Configuration Registry retains database connectivity information, many other parameters are in the Data Server Subsystem Storage Management (STMGT) database and are set using the STMGT GUI (e.g., read threads, write threads, service threads, service thread retries, service thread sleep time, service thread file I/O block size, staging disk server allocation block size).

General Configuration Parameters

Training lessons for specific DAAC functions (e.g., Ingest, Production Planning and Processing, Data Distribution) address configuration parameters related to those functions. Table 1 identifies a few of the subsystem applications, key system configuration parameters that are tunable by the DAACs, known defaults, and known desirable values along with known effects or factors that may influence the values to which they are set. This is a small sample of configuration parameter information that the system is making available. More information, including data on parameters, units of measure, defaults, recommendations, and site/platform specific UNIX parameters can be obtained on the web at the following Universal Resource Location (URL):

http://cmdm ldo.raytheon.com/baseline/

Technical Document 910-TDA-022 at that site addresses custom code configuration parameters.

Table 1. General Configuration Parameters (1 of 3)

Application(s)	Parameter	Default Value	Desired Value and Known Effects/Factors
Various (each application has log files affected by these parameters)	AppLogSize	= 50000 to = 1000000	Varied; For Ingest, = 50000 For DPS, = 200000 For SDSRV, = 5000000 For DDIST, = 1000000 Large values can cause disk space to be used unnecessarily. Small size can cause insufficient log information to be gathered and excessive disk activity since log will fill much more quickly.
	AppLogLevel	0	Discretionary; 0 provides a full trace recording of all events, 1 provides messages related to all major events, 2 yields just records of errors, and 3 turns recording off.
	DebugLevel	3	Discretionary; 3 provides a full trace recording of all events, 2 provides messages related to all major events, 1 yields just records of errors, and 0 turns recording off. The Debug level for SDSRV and the HDF EOS Server should be set to 2. Level 2 will display messages when SDSRV is making a RPC to another server or SYBASE. When the Debug level is set to three, large amounts of metadata are output to the log file. For searches of granules that have big descriptors, the difference in the search time can be as much as 30 times more if the debug level is set to 3.

Table 1. General Configuration Parameters (2 of 3)

Application(s)	Parameter	Default Value	Desired Value and Known Effects/Factors
EcDsScienceDataServer	DSS_NUM_GEN_CATALOGS	15	Controls how many DsMdCatalog objects get created within SDSRV on startup; has direct impact on the number of SYBASE connections held by SDSRV.
	SDSRV_CATALOG_CONNECT_INSTRUCTIONS	SQSOnly	Controls how the DsMdCatalog connects to the database; default causes each object to create only 1 connection. Setting the value to "SybaseAndSQS" causes each object to create two connections and offers performance gains by using direct SQL Server connections where possible. Do not set to "SybaseOnly" because it will then not support spatial data processing.
	SDSRV_AUTO_INSPECT_SWITCH	0 (Off)	Controls whether SDSRV returns commonly inspected metadata attributes as part of search requests; must be off when Results Set Chunking is turned on.
	SDSRV_NUM_INT_SESSION	128	Controls the maximum number of concurrent sessions SDSRV will start to execute asynchronous acquire requests in the queue. If this number is set too low and there are a lot of large requests, the other requests may never be serviced.
	DSSMEMORYMONITORMAXMEMSIZ	500	Units are MB. If set too low, once SDSRV reaches this size, all requests will be rejected. The server will have to be restarted to recover.

Table 1. General Configuration Parameters (3 of 3)

Application(s)	Parameter	Default Value	Desired Value and Known Effects/Factors
EcDsStArchiveServer EcDsStCacheManagerServer	CHECKSUMSTATUS	OFF	Controls whether a checksum is calculated for each file inserted into the archive. If value is ON, this time-consuming and CPU-intensive process can have a significant impact on performance.
EcDsStRequestManagerServer	ServiceThreads	Varies by DAAC	Depends on available resources; throughput is a consideration (Set on the STMGT GUI)
EcDsStStagingDiskServer EcDsStCacheManagerServer	Allocation BlockSize		1024

Although Table 1 addresses many important configuration parameters, it does not provide an exhaustive list, even of general configuration parameters. The values assigned to system parameters can affect system functioning and performance. Any changes that are considered must be investigated in view of anticipated changes in the way the system operates. When troubleshooting system problems, it may also be helpful to determine whether there have been any recent changes to system parameters that could be responsible for impaired performance, and to reset suspect parameters to default and/or recommended values, coordinating with the Database Administrator or Configuration Management Administrator as appropriate.

System Performance Monitoring

The key to maintaining the system in an operationally ready state is effective performance monitoring.

- System operators – close monitoring of progress and status of system and subsystem functions that are the focus of their jobs.
  - Notice any serious degradation of system performance that has an impact on their abilities to conduct their jobs successfully and meet user needs.
- System administrators and system maintenance personnel – monitor overall system functions and performance.
  - Administrative and maintenance oversight of system.
  - Watch for system problem alerts.
  - Use monitoring tools to create special monitoring capabilities.
  - Check for notification of system events.

Accessing the EOS Mission Support Network (EMSn) Web Page

The EOS Mission Support Network (EMSn), formerly EOSDIS Backbone Network (EBnet), is a Wide Area Network (WAN) that provides, in combination with other institutional and public networks, connectivity between geographically distributed EOSDIS facilities to support system mission operations and data production functions. Specifically, its functions include:

- provides connectivity between the DAACs, the EOS Data and Operations System (EDOS) facilities, affiliated data centers, and other designated EOSDIS sites.
- serves as the interface between EDOS, the DAACs, and the NASA Internet (NI).
- transporting spacecraft command, control, and science data nationwide on a continuous basis, 24 hours a day, 7 days a week.
- transports real-time mission-critical data related to the health and safety of on-orbit space systems and raw science telemetry as well as pre-launch testing and launch support.
- transports science data collected from spacecraft instruments and various levels of processed science data including expedited data sets, production data sets, and rate-buffered science data.
- provides wide-area communications through common carrier circuits for internal EOSDIS communications.
- interface to Exchange Local Area Networks (LANs) that provide communications between the WAN and site-specific LANs.

The NASA Communications (Nascom) organization at Goddard Space Flight Center (GSFC) maintains a home page for the EMSn (see Figure 1) on the World Wide Web at the following URL:

http://bernoulli.gsfc.nasa.gov/emsn/

This web site provides an overview of the EMSn as well as current data on its status and performance. Consequently, it can be a useful source of information when you are monitoring system performance. To access the EMSn Web Page, use the following procedure.

Accessing the EOS Mission Support Network (EMSn) Web Page

1 On workstation ***x*0ins02**, at the UNIX prompt in a terminal window, type **Netscape** at a UNIX command prompt and then press the **Return/Enter** key.

- NOTE: The ***x*** in the workstation name will be a letter designating your site: **g** = GSFC, **m** = SMC, **l** = LaRC, **e** = LP DAAC, **n** = NSIDC (e.g., **l0ins02** indicates an interface server at LaRC).
- The starting page selected to appear on launch of the browser is displayed.

2 Click on the **Location** window of the starting page.

- The contents of the **Location** window are highlighted.

3 Enter **http://bernoulli.gsfc.nasa.gov/emsn/** in the **Location** window.

4 Press the **Return/Enter** key on the keyboard.

- The EMSn home page is displayed.

Log in to System Hosts

Many system monitoring and troubleshooting procedures require logging in to a system host, and may involve remote access to distributed hosts. When log in is required in the many procedures specified in this lesson, the procedure simply states "Log in to the host for . . ." or "At the UNIX prompt on the host for . . ." to avoid needless repetition of steps that are likely to be well known. The log-in steps, using the secure shell (ssh) protocol, are presented once here for reference. These steps assume that the operator is logged completely out of the system at the beginning. To log in, use the following procedure.

Log in to System Hosts

1 To access the desktop environment, enter your user ID and password at the initial screen.

- The Common Desktop Environment (CDE) is displayed.

2 To access a UNIX terminal window, select "Terminal" from the pull-up menu at the arrow button at the bottom of the window.

- The Common Desktop Environment (CDE) is displayed with a terminal window.

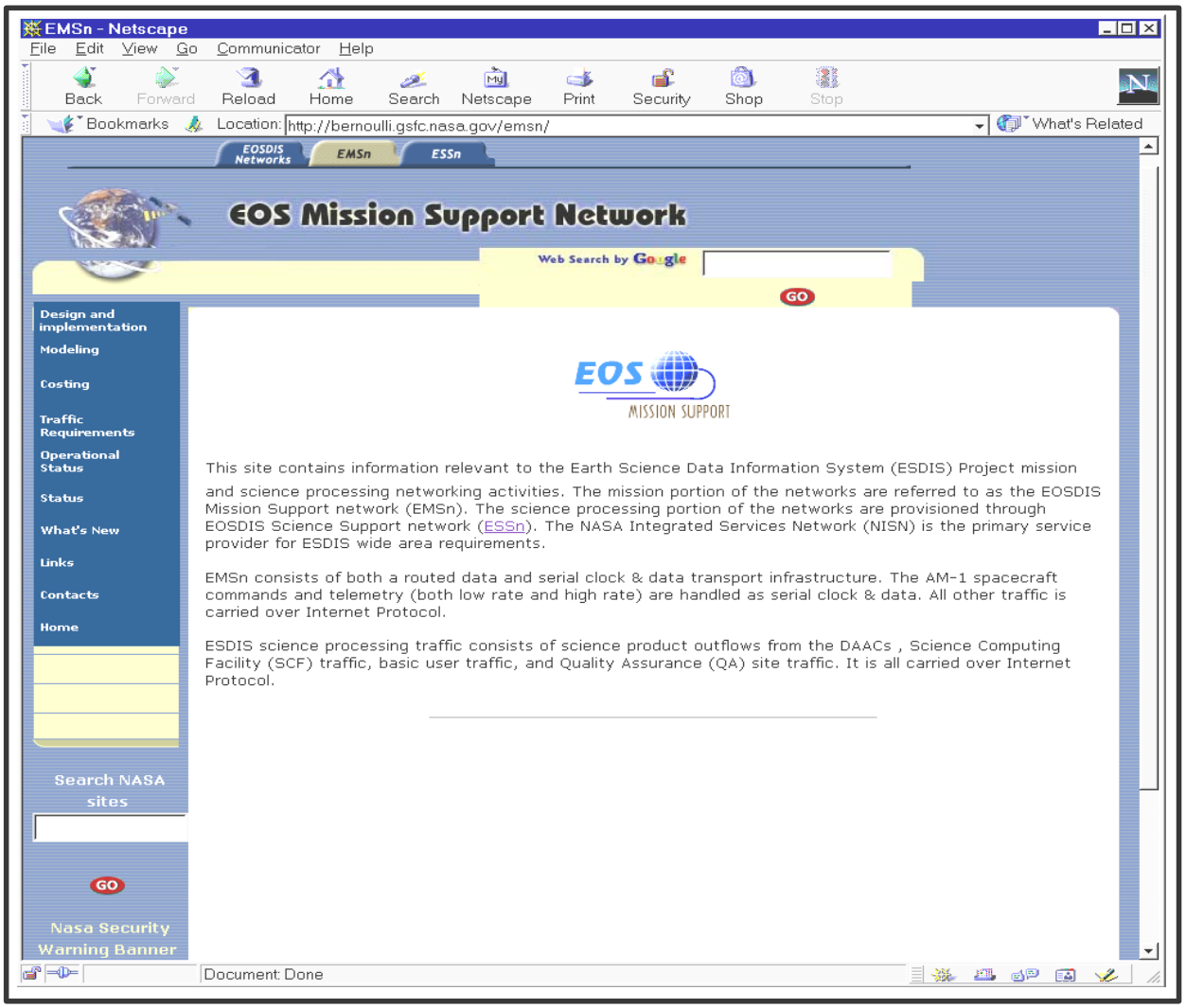

Figure 1. EMSn Home Page

3 If you will want to display a Graphical User Interface (GUI) at the local terminal, it may be necessary to type **setenv DISPLAY** ***<local terminal ID (e.g., ip address>*****:0.0** and then press the **Return/Enter** key.

- The **DISPLAY** variable may default to the desired terminal; to check it, type **echo $DISPLAY**, and then press the **Return/Enter** key.
  - The set value of the **DISPLAY** variable is displayed.

4 To start the log-in to the desired remote host, type **/tools/bin/ssh <*hostname*>** and then press the **Return/Enter** key.

- If you receive the message, **Host key not found from the list of known hosts. Are you sure you want to continue connecting (yes/no)?** type **yes** ("**y**" alone does not work).
- If you have previously set up a secure shell passphrase and executed **sshremote**, a prompt to **Enter passphrase for RSA key '<*user@localhost*>'** appears; continue with Step 5.
- If you have not previously set up a secure shell passphrase; go to Step 6.
- ***Note***: If you need to log in to the remote host as an account other than yourself (e.g., **root**), the ssh command takes the form **ssh -l <*account*> <*hostname*>**.

5 If a prompt to **Enter passphrase for RSA key '<*user@localhost*>'** appears, type your ***Passphrase*** and then press the **Return/Enter** key. Go to Step 7.

- The prompt indicates successful log in to the selected host.

6 At the **<*user@remotehost*>'s password:** prompt, type your ***Password*** and then press the **Return/Enter** key.

- The prompt indicates successful log in to the selected host.

7 Log in is complete.

Checking the Health and Status of the Network

The system is heavily dependent on the use of computer networks. Graphical tools available to monitor system status include a COTS program, **WhatsUp Gold**, two custom programs, **ECS Assistant/ECS Monitor** and **EcMs-Whazzup??**, and a script **EcCsIdPingServers** that permits an operator to ping all servers. These programs provide system monitors with real-time status of the system and indications of potential problem areas.

WhatsUp Gold

WhatsUp Gold (Version 8.0) is a graphical network monitoring application selected to monitor critical devices and services on the Production Local Area Network (LAN) and/or additional system networks. It initiates alerts when it detects problems, and can send remote notifications by beeper, pager, and e-mail. It logs activities to facilitate troubleshooting and reporting. It is implemented on Windows 2000 on a Personal Computer (PC) connected to the Production LAN. Additional information on WhatsUp Gold is available in 609-EMD-001, Release 7.10 Operations Tools Manual for the EMD Project and the *WhatsUp Gold User's Guide* vendor documentation, which is available on the Internet at the following URL:

http://www.ipswitch.com/Support/WhatsUp/guide/v800/index.html

The procedures in this section assume that the installation procedure specified in Document 914-TDA-246, *WhatsUp Gold 8.0 Maintenance Upgrade for the ECS Project: Release Notes*, has been executed. During the installation process the installer performs the following activities:

- Installs the WhatsUp Gold 8.0 application.
- Creates a network map.
- Sets up network map alert notifications.
- Sets up a WinPopup notification message.
- Sets up an SMTP e-mail notification message.
- Sets the network map polling properties.
- Sets device properties.
- Saves the map.
- Starts WhatsUp Gold polling.

Once a network has been discovered by WhatsUp Gold, monitoring the state of the network can begin. Figure 2 shows the type of network map that the program creates for monitoring. Monitoring includes tasks such as checking the map for color alerts that indicate problems and checking for network changes.

Launching WhatsUp Gold and Displaying The Network Map

As noted previously, the WhatsUp Gold application and graphical user interface (GUI) are installed and run in the Windows environment on a PC. Once the application is started and being used to monitor the network, it is typically left running at all times. This is because the application must be running with the network map open in order for its monitoring activities (i.e., polling and logging) to occur. Therefore, under normal circumstances, it will seldom be necessary to launch the application because it will be running continually. However, if something causes the application to be stopped (e.g., a failure of its host, or an inadvertent closure of the application), it will be necessary to start it again using the following procedure.

Launching WhatsUp Gold and Displaying the Network Map

1 Log on to the PC where WhatsUp Gold has been installed.

2 Click on the **Start** button at the lower left corner of the PC monitor and select **Programs → WhatsUp → WhatsUp Gold** from menus.

- The WhatsUp Gold main window is displayed.

3 If the network map is not already open, select **File → Open** from the pull-down menu.

- The **Open** dialog box is displayed.

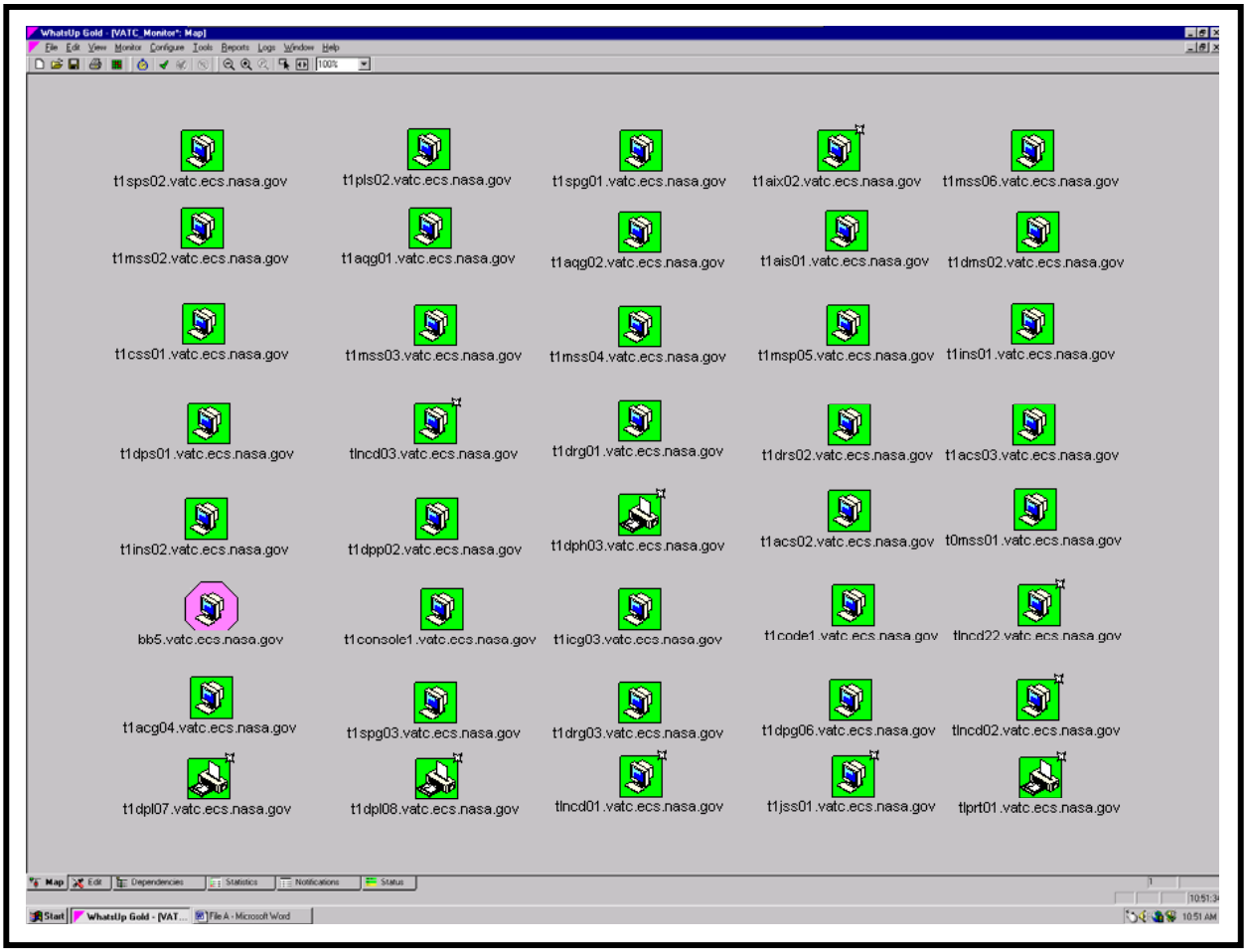

Figure 2. WhatsUp Gold Network Map

4 Double-click on the network map (or select the name with a single click and then click on the **Open** button).

- The network map is displayed and polling begins.

Responding to Color Alerts and Obtaining Status of a Node

Objects that have an abnormal condition can be identified by a change in appearance on the network map. Colors may be changed, but the following default conventions apply in a map window to indicate the status of a device or service:

- Device name highlighted: indicates that WhatsUp Gold has recorded an event for the device in a log.
- Device icon on a green square background: indicates that the device is up (i.e., responds to polling).

- Device icon on a light green diamond-shaped background: indicates that the device has missed at least one polling request.
- Device icon on a yellow diamond-shaped background: indicates that the device has missed two polling requests.
- Device icon on a red elongated diamond-shaped background: indicates that the device is down (i.e., is not accessible or has missed four consecutive polling requests). Once the device has missed eight polling requests, the background is changed to a dark red starburst.
- Device icon on a light purple octagon-shaped background: indicates that a standard service on the device is down.
- Device on a gray square background: indicates monitoring has been turned off for the device.

A color alert on a symbol indicates that some part of that object may have problems. To help isolate a fault on the network, it is possible to click with the right (or non-preferred) mouse button on the symbol with the color alert and bring up a status display that provides the overall status of the node based on TCP/IP polling, the Internet Control Message Protocol (ICMP) status, and the status of services on the node. Figure 3 shows an example of a status display for a node that is active and responding to polling but on which the DNS and FTP services are down (indicated in red).

The following procedure is applicable for obtaining and reviewing the WhatsUp Gold **Quick Status** display for a node. It includes a step for acknowledging the alert that prompted calling the status display. This acknowledgement prevents additional instances of the alert on the node unless the alert is specifically configured to be sent regardless of the acknowledgement.

Responding to a Color Alert and Obtaining the Status of a Node

1 With the network map open, use the right (or non-preferred) mouse button to click on the icon for the node showing a color alert (i.e., the node label is highlighted if there has been an entry in the Activity Log related to the alert and the background is other than a green square or whatever you have selected as the indication for normal status).

- A popup menu is displayed.

2 On the popup menu, click on **Quick Status . . .**.

- The **Quick Status** dialog box for the selected node is displayed showing the **Status** (including a device status code of 0 to indicate that the device is up or other value to indicate an error, the text of an error message, and information about device polling, ICMP status, and a graph showing any monitored services in green if they are up or red if they are down) and providing access to charts of polling **History** and **Up-Time**. It also provides access to a **Log** display of any service or device "up" or "down" activities for the selected node.

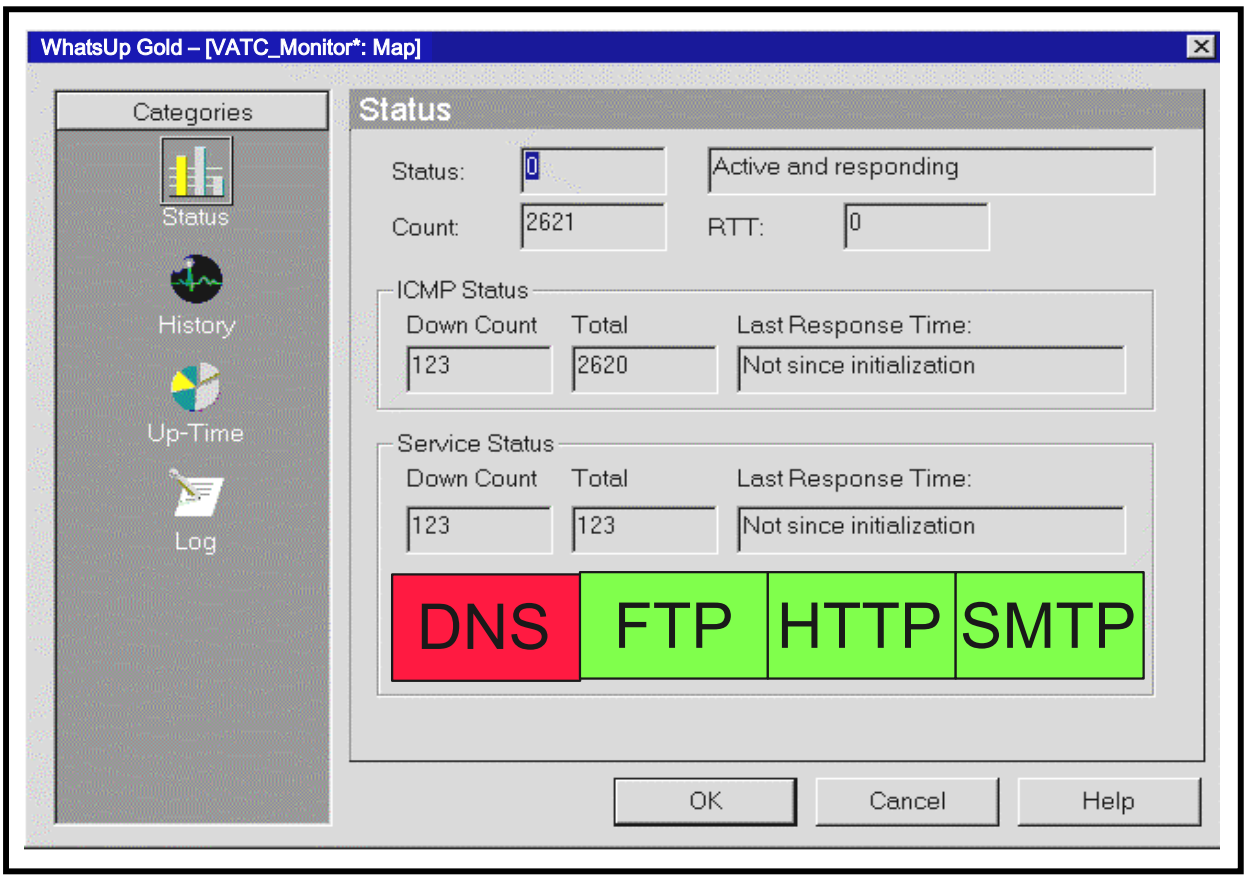

Figure 3. WhatsUp Gold Quick Status Display for a Node

3 Review the status information and, in the left frame, click as desired on **History**, **Up-Time**, **Log**, or **Status** to display or re-display information in those categories.

4 Click on the **OK** button to dismiss the **Quick Status** dialog.

- The **Quick Status** dialog is closed.

5 To acknowledge the alert, follow menu path **Monitor→Acknowledge**.

- The highlighting is removed from the node label and additional instances of the alert on the node are prevented (unless the alert has been configured to be sent regardless of the acknowledgement – see **User's Guide**).

Configuring a Popup Menu for a Node or Multiple Nodes

The popup menu accessible using the right (or non-preferred) mouse button to click on a node on a network map (see Figure 3) typically includes the following choices:

- **Check Now** – initiate a single poll of the network.
- **1 Connect** – open a telnet session on the device represented by the node on the map.
- **2 Ping** – start the Ping tool to send ICMP packets to the device and view the results.
- **3 Traceroute** – start the Traceroute tool to examine the network path and the intervening routers from the WhatsUp Gold machine to the device.
- **4 Browse** – start the default browser using the IP address as the URL.
- **Customize Menu . . .** – open the **Item Properties** dialog box to permit adding, editing, deleting, or moving items on the popup menu.
- **Performance Graphs** – open **Report Job Properties** and **WhatsUp Gold Performance Graphs** dialogs to permit selecting and preparing performance reports and graphs.
- **SNMP View . . .** – start the SNMP View tool using the device's IP address. The SNMP View tool lets you read SNMP data on the device. This command appears only if the SNMP Manageable option (on the Device Properties (SNMP)) is selected.
- **Quick Status . . .** – open the **Quick Status** dialog to provide access to status, history, up-time, and log information for the device.
- **Properties . . .** – open the **Item Properties** dialog box to permit setting parameters for the device, including General functions, monitoring functions, services, alerts, and other categories (see **User's Guide**).

The popup menu may be configured or customized by selecting **Customize Menu . . .**. This opens the **Item Properties** dialog box illustrated in Figure 4.

The following procedure is applicable.

Configuring the Popup Menu for a Node or Multiple Nodes

1 On the network map, select the node(s) for which the popup menu is to be configured. If more than one node is to be selected, use shift-click (i.e., hold down the shift key and click sequentially on the nodes to be selected) or click-drag (i.e., hold down the mouse button and drag diagonally to outline a rectangle enclosing the items to be selected, releasing the button when the items are enclosed).

- The selected nodes are indicated by the appearance of small white squares at the corners.

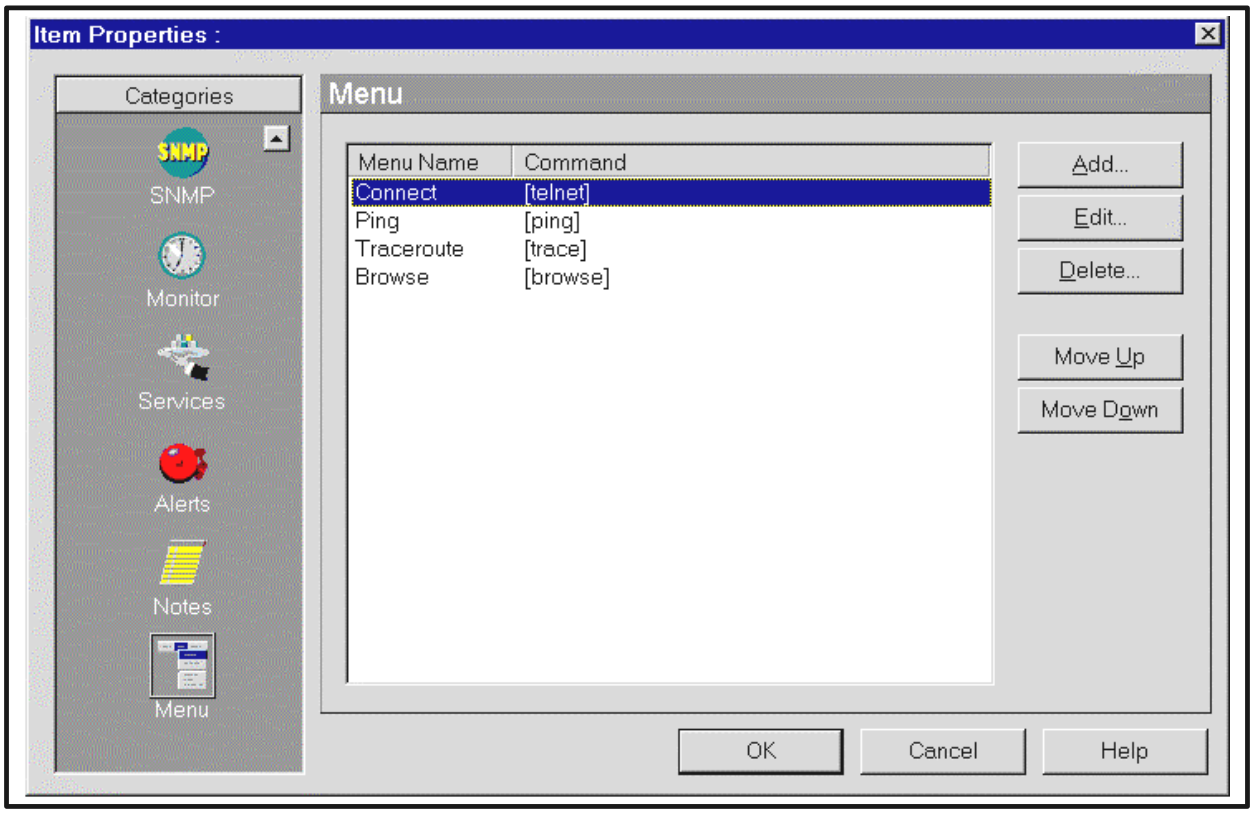

Figure 4. WhatsUp Gold Item Properties Dialog Box

2 Use the right (or non-preferred) mouse button to click on the selected node (or one of the selected nodes).

- A popup menu is displayed.

3 On the popup menu, click on **Customize Menu . . .** (for one node) or **Add Custom Menus to Selected Devices . . .** (for multiple nodes).

- If one node was selected, the **Item Properties** dialog box is displayed to permit customization of the menu for that node. (*Note*: It is also possible to display this box for one node by selecting **Properties** from the popup menu and then clicking on **Menu** in the left frame of the resulting **Item Properties** dialog.)
- If more than one node was selected, the **Add to Selected Devices** dialog box is displayed to permit customization of the menus for the selected nodes. This box is similar to the **Item Properties: Menu** dialog, but menu items on any of the selected nodes appear in the dialog box, with a check box next to each item. For an item that is on all selected nodes, the check box is white and displays a check mark; for an item that is assigned to some but not all of the selected nodes, the check box is gray and displays a check mark.

4 To add a menu item, click on the **Add** button.

- The **Edit Menu Item** dialog box is displayed with three empty fields: (1) **Menu name:**; (2) **Command:**; and (3) **Arguments:**. Using this box, it is possible to create a menu item for starting a program when the item is chosen. The Menu name: field is used to specify the name of the menu item that will appear in the popup menu. The Command: field is used to enter the (file)name of any executable program to be started when the menu item is chosen from the popup menu. The Arguments: field is used to pass parameters to the specified program. See the **User's Guide** for detailed information on establishing and using popup menu items to run programs.

5 To select a displayed menu item for editing or moving, click on the menu item in the list.

- The selected item is highlighted.

6 To edit a selected item, click on the **Edit** button.

- The **Edit Menu Item** dialog box is displayed as in Step 4, with information for the selected item displayed in its three fields. The displayed data may be edited to change the menu display and/or actions (see **User's Guide**).

7 To move a selected item up or down in the list, click on the **Move Up** or **Move Down** button as appropriate.

- The selected item is moved up or down in the list as the button is clicked.

8 To delete a selected item for a single node, using the **Item Properties** dialog box, click on the **Delete** button.

- A confirmation dialog is displayed to ensure that you would like to remove the item; click on the **Yes** button to confirm.

9 For multiple nodes, to delete an item from the popup menu for all selected nodes, using the **Add to Selected Devices** dialog, click repeatedly on the accompanying checkbox until the check mark is removed.

- The check box is empty.

10 For multiple nodes, to assign a menu item to all of the selected nodes, using the **Add to Selected Devices** dialog, click repeatedly on the accompanying checkbox until the check mark is displayed in a white (i.e., not gray) box.

- The checkbox is white and the check mark is displayed.

11 Click on the **OK** button.

- The menu changes are applied and the **Item Properties** or **Add to Selected Devices** dialog is closed.

Using Network Tools

WhatsUp Gold provides a set of tools to display a variety of information about nodes on the network. These tools are displayed on tabs, with the parameters and results area for one tool on each tab. The tools include:

- **Info** – display a summary of device information.
- **Time** – synchronize your computer's clock with a remote time server.
- **HTML** – query a web address.
- **Ping** – verify connectivity to a host.
- **TraceRoute** – Trace and view the route to an Internet host.
- **Lookup** – query Internet domain name servers for information about hosts and name servers.
- **Finger** – display information about users on a host.
- **Whois** – display information from the network information center about Internet domain ownership and Internet groups.
- **LDAP** – (Lightweight Directory Access Protocol); search directories for names and information stored in an LDAP directory on another computer**.**
- **Quote** – view quotations from a quote server.
- **Scan** – scan a range of IP addresses to create a network map.
- **SNMP** – view and graph Simple Network Management Protocol (SNMP) values for a device.
- **WinNet** – View Windows Network domains, hosts, and workstations.
- **Throughput** – test data throughput on the connection between your computer and a remote computer.
- **System Info** – view information about your local system.

Not all of these tools are necessarily appropriate for DAAC use, but the **WhatsUp Gold User's Guide** provides detailed information on all of them. This lesson presents information on just three of them.

The **Info** tool, illustrated in Figure 5, displays a summary of information about a network host or device, including the official host name, IP address, and contact information. An Info request on a host name also pings the host to verify connectivity.

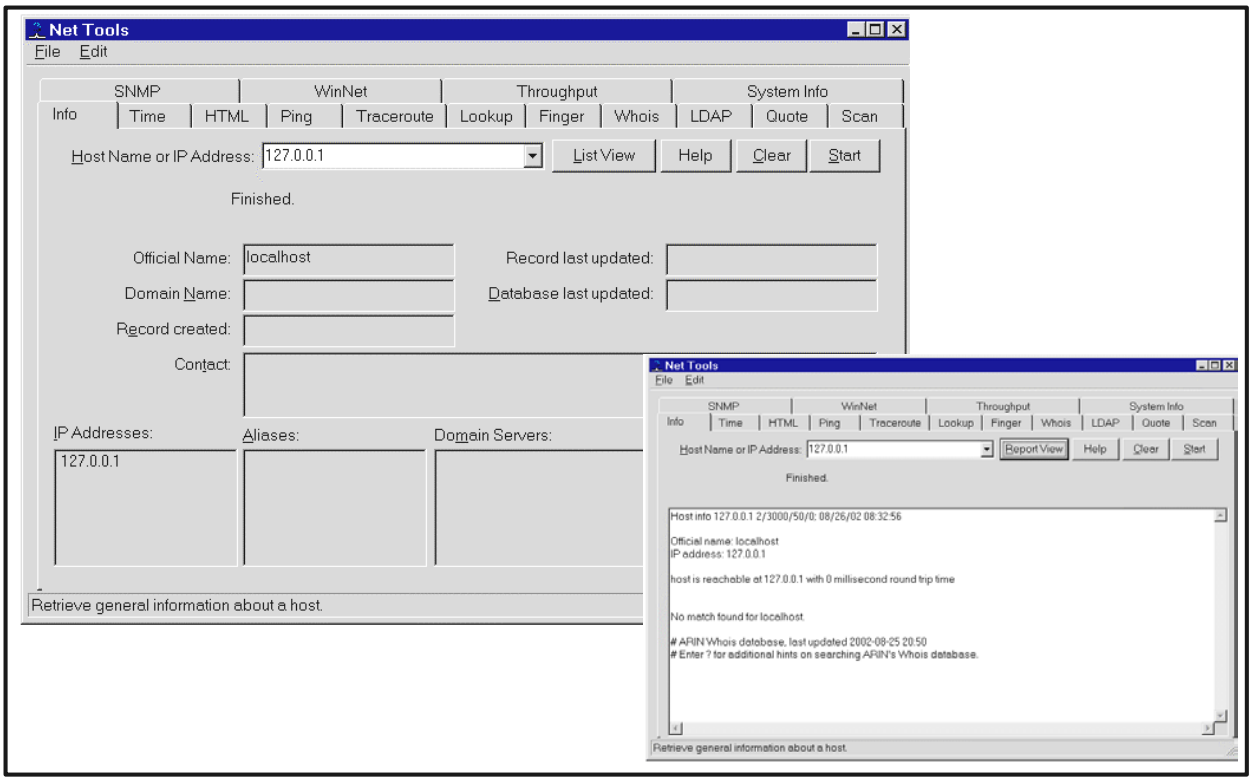

Figure 5. WhatsUp Gold Net Tools - Info Tool

The following procedure is applicable for using the Net Tools Info Tool to obtain information on a node.

Use the Net Tools Info Tool to Obtain Information on a Node

1 Follow menu path **Tools→Net Tools. . .**.

- The **Net Tools** window is displayed.

2 If necessary, click on the **Info** tab to access the **Info** tab display (when the **Net Tools** window is opened, WhatsUp Gold displays the tab most recently accessed).

- The **Info** tab controls and fields are displayed.

3 In the **Host Name or IP Address:** field, type the name or IP address of the host to be queried (this must be a fully qualified host name or address).

- The typed entry is displayed in the field.

4 Click on the **Start** button.

- A **Searching . . .** indicator appears and the **Start** button toggles to **Stop** to show that the query is in progress. At any time during the query, a click on the **Stop** button stops the query.
- The results of the query are displayed. (A click on the **Clear** button erases the results from the display window.) The **List View/Report View** button permits toggling between the Report View and the List View of the results. The Report View is a summary showing:
  - Official Name.
  - Domain Name.
  - Date the record was created.
  - Date the record was last updated.
  - Date the database was last updated.
  - Contact information (from the Whois database).
  - IP Addresses and Domain Servers.

  The List View is a detailed list of the obtained information, including the results of the ping and more extensive information on the query.

The **Ping** tool, illustrated in Figure 6, is a network diagnostic tool used to verify connectivity to a selected system on the network. This tool sends a data packet (an ICMP "echo request") to a remote host and displays the results for each "echo reply." This pinging command also displays the time for a response to arrive in milliseconds, as well as debugging information about the network interface. Multiple instances of the **Ping** tool may be active simultaneously.

The use of the **Ping** tool provides a quick way to verify that a device is not functioning. If the ping operations do not produce any responses or they time out, then the node is probably down or otherwise unreachable over the network.

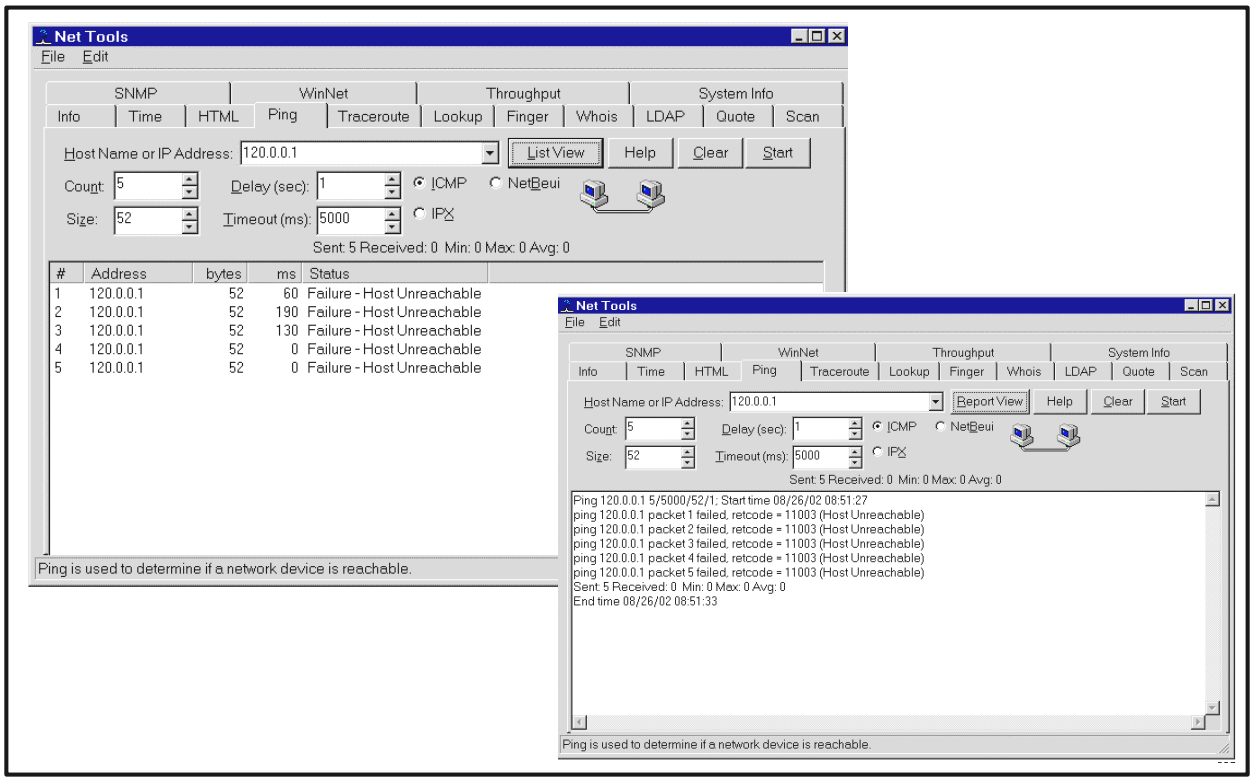

Figure 6. WhatsUp Gold Net Tools - Ping Tool

The following procedure is applicable for using the Net Tools Ping Tool to verify connectivity on a node.

Use the Net Tools Ping Tool to Verify Connectivity on a Node

1 Follow menu path **Tools→Net Tools. . .**.

- The **Net Tools** window is displayed.

2 If necessary, click on the **Ping** tab to access the **Ping** tab display (when the **Net Tools** window is opened, WhatsUp Gold displays the tab most recently accessed).

- The **Ping** tab controls and fields are displayed.

3 In the **Host Name or IP Address:** field, type the name or IP address of the host to be checked (this must be a fully qualified host name or address).

- The typed entry is displayed in the field.

4 Click one of the radio buttons below the **Host Name or IP Address:** field to specify the protocol to use for pinging (use **ICMP** for TCP/IP hosts, **IPX** for Novell NetWare hosts, or **NetBEUI** for Windows network hosts).

- The selected radio button is filled to indicate the specified protocol.
- ***Note***: To ping an IPX device, Microsoft's NWLink IPX/SPX Compatible Transport must be installed and running on the WhatsUp Gold system (see "System Requirements" in the **User's Guide**).

5 If it is desired to change the default number of pings to be sent, click at the end of the **Count:** field.

- The cursor is displayed at the end of the **Count:** field.

6 To set a new value for **Count:**, use the **Backspace** key to remove the current value, and type the new value.

- The typed value appears in the **Count:** field.

7 Repeat Steps 5 and 6 for other options you wish to change, substituting **Delay (sec.):**, **Size**, or **Timeout (ms):** for the field name of the option to be changed, specifying respectively the number of seconds to wait between pings, the length in bytes of each packet to be sent by the **Ping** command, and the number of milliseconds of non-response from the host to be considered a failure of the ping.

8 Click on the **Start** button.

- The **Start** button toggles to **Stop** to show that the ping operation is in progress. At any time during the operation, a click on the **Stop** button stops the pinging.
- The display field at the bottom of the window shows the results of the pings. (A click on the **Clear** button erases the results from the display window.) The **List View/Report View** button permits toggling between the Report View and the List View of the results. The Report View provides, for each ping as it occurs, the address, the number of bytes sent, the response time, and the status. The List View lists the pings, the result for each packet, and the retry code.

The **Traceroute** tool, illustrated in Figure 7, permits the operator to trace and view the route an IP packet follows from the local host to another host on the network. Response times are displayed in milliseconds and vary depending on network load. **Traceroute** can be helpful for finding potential trouble spots on large and complex networks that are connected by routers. The results of a traceroute operation can be displayed on a network map.

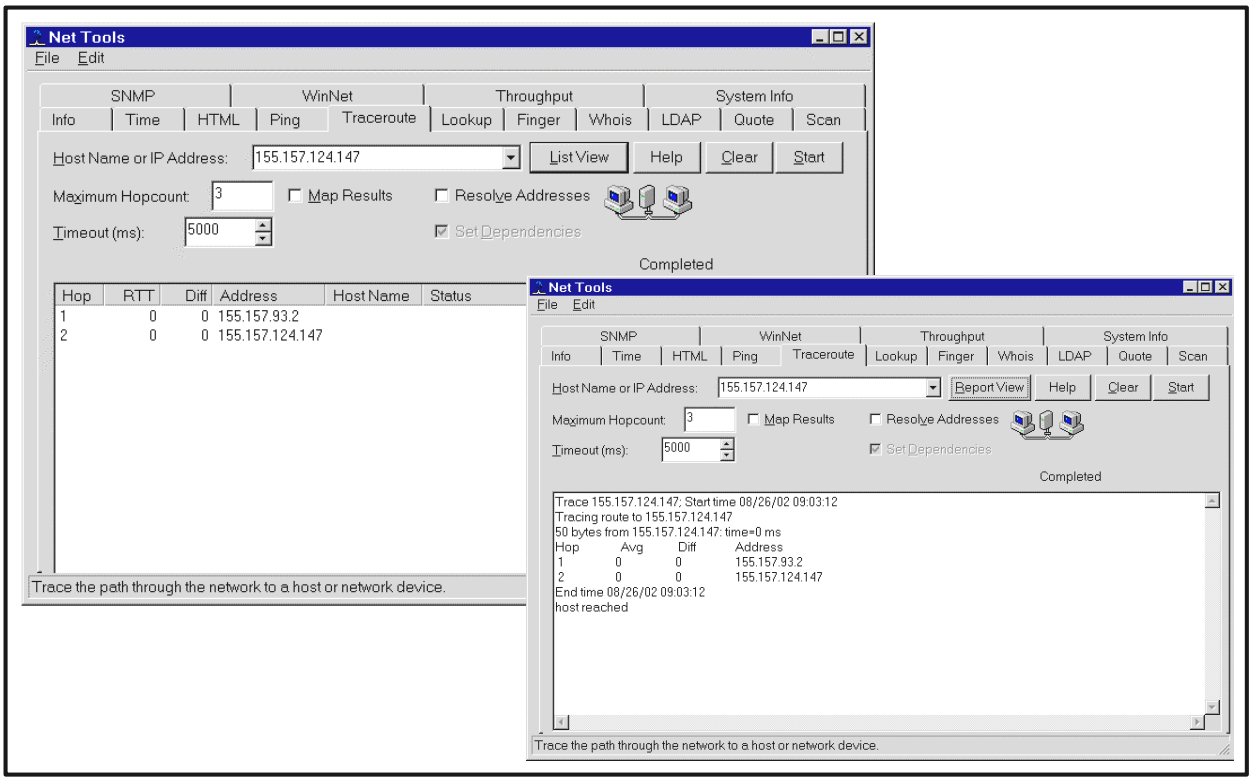

Figure 7. WhatsUp Gold Net Tools Traceroute Tool

The following procedure is applicable for using the Net Tools Traceroute Tool to trace a route.

Using the Net Tools Traceroute Tool to Trace a Route

1 Follow menu path **Tools→Net Tools. . .**.

- The **Net Tools** window is displayed.

2 If necessary, click on the **Traceroute** tab to access the **Traceroute** tab display (when the **Net Tools** window is opened, WhatsUp Gold displays the tab most recently accessed).

- The **Traceroute** tab controls and fields are displayed.

3 In the **Host Name or IP Address:** field, type the name or IP address of the host to which the route is to be traced (this must be a fully qualified host name or address).

- The typed entry is displayed in the field.

4 If it is desired to change the maximum number of hops to trace before ending the traceroute operation (a "hop" is the passing of an IP packet from one host to another), click at the end of the **Maximum Hopcount:** field.

- The cursor is displayed at the end of the **Maximum Hopcount:** field.

5 To set a new value for **Maximum Hopcount:**, use the **Backspace** key to remove the current value, and type the new value.

- The typed value appears in the **Maximum Hopcount:** field.

6 If it is desired to change the number of milliseconds of non-response from the host to cause the Traceroute to fail, click at the end of the **Timeout (ms):** field.

- The cursor is displayed at the end of the **Timeout (ms):** field.

7 To set a new value for **Timeout (ms):**, use the **Backspace** key to remove the current value, and type the new value.

- The typed value appears in the **Timeout (ms):** field.

8 If it is desired to specify that WhatsUp Gold is to map the results of the Traceroute operation, click on the **Map Results** checkbox.

- The clicked box displays a checkmark to indicate its selection, and when **Traceroute** is run, the route will be drawn on the network map, displaying an icon for each router and showing the connections from router to router until it reaches the host.

9 If it is desired to specify that the host names of each router along the route are to be displayed along with the IP addresses, click on the **Resolve Addresses** checkbox.

- The clicked box displays a checkmark to indicate its selection, and when **Traceroute** is run, the host names as well as the IP addresses will be shown for each router (instead of just the IP addresses). This will add time to the Traceroute operation to resolve the IP addresses.

10 If **Map Results** is checked and it is desirable to set dependencies such that each router found is to be set as an "up" dependency on the previous router in the route, click on the **Set Dependencies** checkbox. This choice is only available when **Map Results** is checked. It means that when WhatsUp Gold polling finds a router down, it will not poll routers further along the route to a host.

- The clicked box displays a checkmark to indicate its selection, and when **Traceroute** is run, each router found will be set as an "up" dependency on the previous router in the route.

11 Click on the **Start** button.

- An indicator shows the Traceroute operation in progress and the **Start** button toggles to **Stop** to show that the operation is in progress. At any time during the operation, a click on the **Stop** button stops the tracing.

- The display field at the bottom of the window shows the results of the traceroute operation. (A click on the **Clear** button erases the results from the display window.) The **List View/Report View** button permits toggling between the Report View and the List View of the results. The Report View provides for each hop as it occurs the address, the response time or Round Trip Time (RTT), and the status. The List View lists the hops, addresses, and more detailed information on the tracing of the route.

Using WhatsUp Gold Logs

WhatsUp Gold captures data in four types of logs:

- **Syslog** – logs standard UDP messages sent from devices (e.g., routers, switches, UNIX hosts).
- **Activities** – logs activities (changes to network status, such as a device going down or a device coming back up). The Activity Log provides a history of what has occurred on the network. An associated **Debug Log** window permits viewing activities as they occur.
- **Statistics Log** – records polling statistics (accumulated round trip times, or RTT, of polls sent to a device) to measure the availability and performance of a device.
- **SNMP Trap Log** – displays all SNMP traps that have been received. To enable SNMP traps, the SNMP trap handler must be specifically enabled (refer to **User's Guide**).

From the logged data, WhatsUp Gold can create several reports and graphs that show the status of the network in different ways. From the **Reports** menu the following reports can be created:

- **Performance Graphs** - show devices by best or worst performance based on aggregated polling statistics (and shows graphs for each device).
- **Outage Report** - shows device "up" and "down" state changes, service "up" and "down" state changes, and WhatsUp Gold activities such as map open and close. The report can be printed or it can be used to create a tab-delimited file (that can be imported into another application, such as a spreadsheet).
- **Statistics Reports** - show round trip times and percentage of missed polls based on the accumulated polling statistics for each device. The report can be printed or it can be used to create a tab-delimited file (that can be imported into another application, such as a spreadsheet).

Detailed information on the nature of the logged data and the log designations is provided in the **User's Guide**. The **User's Guide** also describes how to change the way activities are logged, and how to create reports and graphs using the logged data to show the status of the network in several ways (e.g., performance graphs, activity reports, and statistics reports). The Activity Log, described here, can be a useful initial troubleshooting tool.

The Activity Log stores data in weekly file increments with the following file format: **EV-*yyyy-mm-dd*.tab**.

The log automatically records application-level activities (e.g., a device or service going down) for devices that have **Enable Logging** selected in the **Alerts** dialog box. After sufficient activity data logging, the data can be used to generate reports. The data can also be saved in a tab-delimited file that can be imported to another application, such as a spreadsheet program. It may also be useful just to view the Activity Log for information related to an observed problem. For example, if the network map shows a color alert for a device and the device does not respond to a ping, the Activity Log may provide additional information concerning the time the device went down and a message addressing the problem. Use the following procedure for reviewing the WhatsUp Gold Activity Log.

Reviewing the WhatsUp Gold Activity Log

1 Follow menu path **Logs→ Activity Log . . .**.

- The **Activity Logs - <*date range*>** window is displayed. ***Note***: The date range is the current week, and the activities are displayed in raw format (the **Raw** radio button is filled to indicate its selection) with the most recent first. It is possible to click on the **Formatted** radio button to select a display showing the date and time information in *mm/dd/yyyy* and *hh:mm:ss* format, with column headers that can be clicked to sort the list by date, time, or message.

2 Review the list of activities to locate a message identifying an **Alert** or **DOWN** activity for any device that has shown a color alert on the network map or that has failed to respond to pinging.

- The message provides the date and time of the activity, as well as specific information in the message concerning the type of activity.

3 If it is desirable to view activities from the prior week, click on the **Back** icon (⇦).

- The activities from the previous week are displayed. ***Note***: The date range specifies the prior week, and the activities are displayed in the currently selected format (raw or formatted) with the most recent first. There are other icons: a **Filter** icon (or menu equivalent) permits customizing the log viewer to show logs in a different time span other than weekly; a **Find** icon permits locating text in the display; a **Print** icon permits printing the contents of the display; and other navigation icons permit moving to specific ranges of activities for display. The **User's Guide** provides detailed guidance on navigating and locating text in the Activity Log display.

4 If it is desirable to print the contents of the display, click on the **Print** icon.

- The **Print** dialog box is displayed, permitting specification of a printer, print range, and number of copies.

Whazzup???, ECS Health Check GUI, and ECS Assistant/Monitor

Whazzup??? is a management tool that provides operators and maintainers with a means of monitoring and checking the network, for quickly identifying parts of the network that may have problems, and for isolating faults on the network. It is a web-based application, and is therefore accessed by means of browser software. It provides the following general features:

- Host and mode views of network resources.
- Status information on resources (indicated by color coding: purple indicates inability to ping the specified host, blue indicates incomplete data collection, red indicates that the server is down, and yellow indicates that a warning threshold has been exceeded).
- Performance monitoring capability.

Another set of tools for monitoring and managing network resources is ECS Assistant and its companion, ECS Monitor, which offer:

- Installation support.
- Indication of network and server status and changes.
- Easy-to-use capability to ping all servers.

Figure 8 shows the welcome screen for Whazzup.The welcome screen has buttons and links at the bottom permitting an operator to view status by various means (e.g., host, mode), verify modes and view what servers may be down, and access data on performance. Figure 9 shows an example of a view, obtained by clicking on the **Performance** link at the bottom of the welcome screen, listing various performance statistics for the hosts in a table with one row for each host. This screen provides a quick overview of the system status; if Whazzup is unable to ping a host, the row for that host is highlighted in purple. Figure 10 shows an example of a view, obtained by selecting "What's Down" from a menu activated by clicking on the **Verify Mode** button at the bottom of the screen, showing servers that are down in the different modes. This view will also identify any hosts that Whazzup is unable to ping, highlighting their entries in purple.

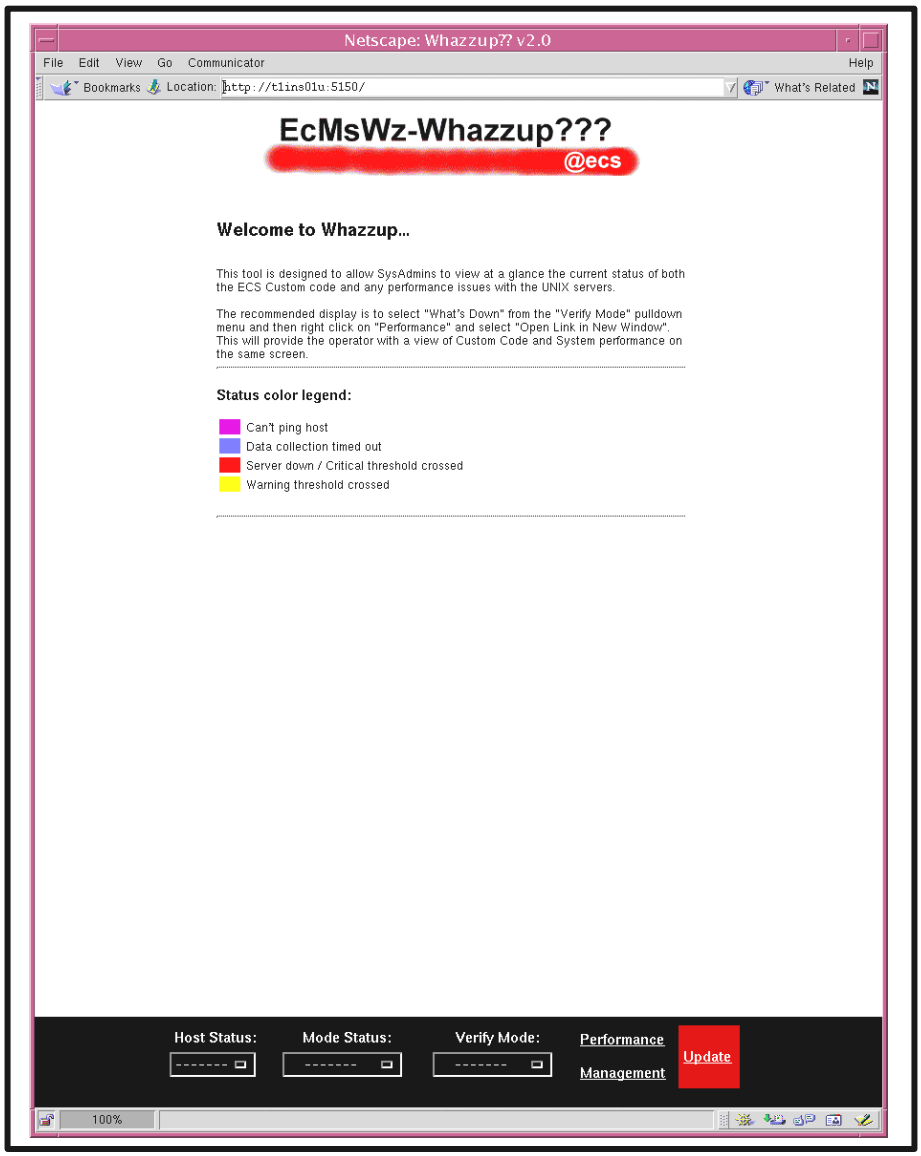

Figure 8. Whazzup Welcome Screen

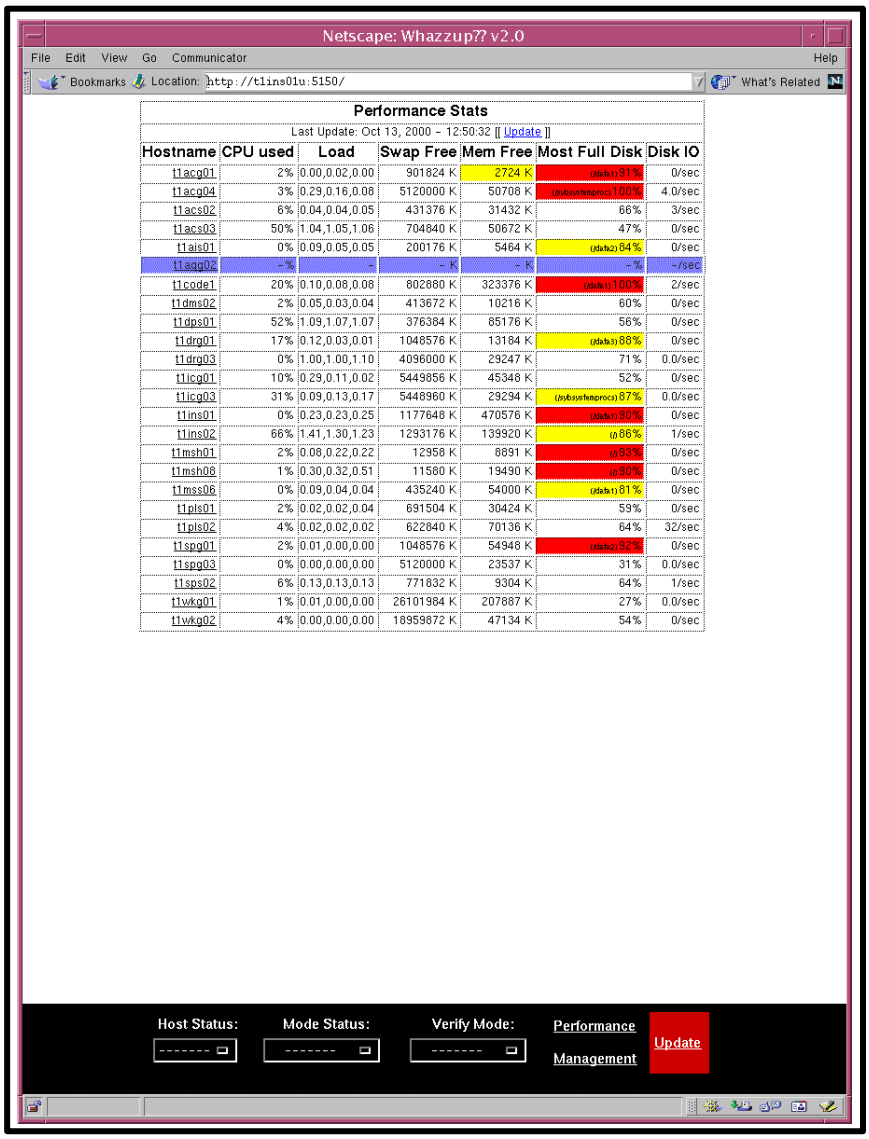

Performance Stats

Last Update: Oct 13, 2000 - 12:50:32 [[Update]]

Hostname	CPU used	Load	Swap Free	Mem Free	Most Full Disk	Disk IO
t1acg01	2%	0.00,0.02,0.00	901824 K	2724 K	(/data1) 91%	0/sec
t1acg04	3%	0.29,0.16,0.08	5120000 K	50708 K	(/usr/usrtemproc) 100%	4.0/sec
t1acs02	6%	0.04,0.04,0.05	431376 K	31432 K	66%	3/sec
t1acs03	50%	1.04,1.05,1.06	704840 K	50672 K	47%	0/sec
t1ais01	0%	0.09,0.05,0.05	200176 K	5464 K	(/data2) 84%	0/sec
t1agg02	-%	-	- K	- K	-%	-/sec
t1code1	20%	0.10,0.08,0.08	802880 K	323376 K	(/data1) 100%	2/sec
t1dms02	2%	0.05,0.03,0.04	413672 K	10216 K	60%	0/sec
t1dps01	52%	1.09,1.07,1.07	376384 K	85176 K	56%	0/sec
t1drg01	17%	0.12,0.03,0.01	1048576 K	13184 K	(/data3) 88%	0/sec
t1drg03	0%	1.00,1.00,1.10	4096000 K	29247 K	71%	0.0/sec
t1icg01	10%	0.29,0.11,0.02	5449856 K	45348 K	52%	0/sec
t1icg03	31%	0.09,0.13,0.17	5448960 K	29294 K	(/usr/usrtemproc) 87%	0.0/sec
t1ins01	0%	0.23,0.23,0.25	1177648 K	470576 K	(/data1) 90%	0/sec
t1ins02	66%	1.41,1.30,1.23	1293176 K	139920 K	(/) 86%	1/sec
t1msh01	2%	0.08,0.22,0.22	12958 K	8891 K	(/) 93%	0/sec
t1msh08	1%	0.30,0.32,0.51	11580 K	19490 K	(/) 90%	0/sec
t1mss06	0%	0.09,0.04,0.04	435240 K	54000 K	(/data1) 81%	0/sec
t1pls01	2%	0.02,0.02,0.04	691504 K	30424 K	59%	0/sec
t1pls02	4%	0.02,0.02,0.02	622840 K	70136 K	64%	32/sec
t1spg01	2%	0.01,0.00,0.00	1048576 K	54948 K	(/data2) 92%	0/sec
t1spg03	0%	0.00,0.00,0.00	5120000 K	23537 K	31%	0.0/sec
t1sps02	6%	0.13,0.13,0.13	771832 K	9304 K	64%	1/sec
t1wkg01	1%	0.01,0.00,0.00	26101984 K	207887 K	27%	0.0/sec
t1wkg02	4%	0.00,0.00,0.00	18959872 K	47134 K	54%	0/sec

Figure 9. Whazzup??? Performance Stats Screen. Row highlight is purple, indicating inability to ping the host.

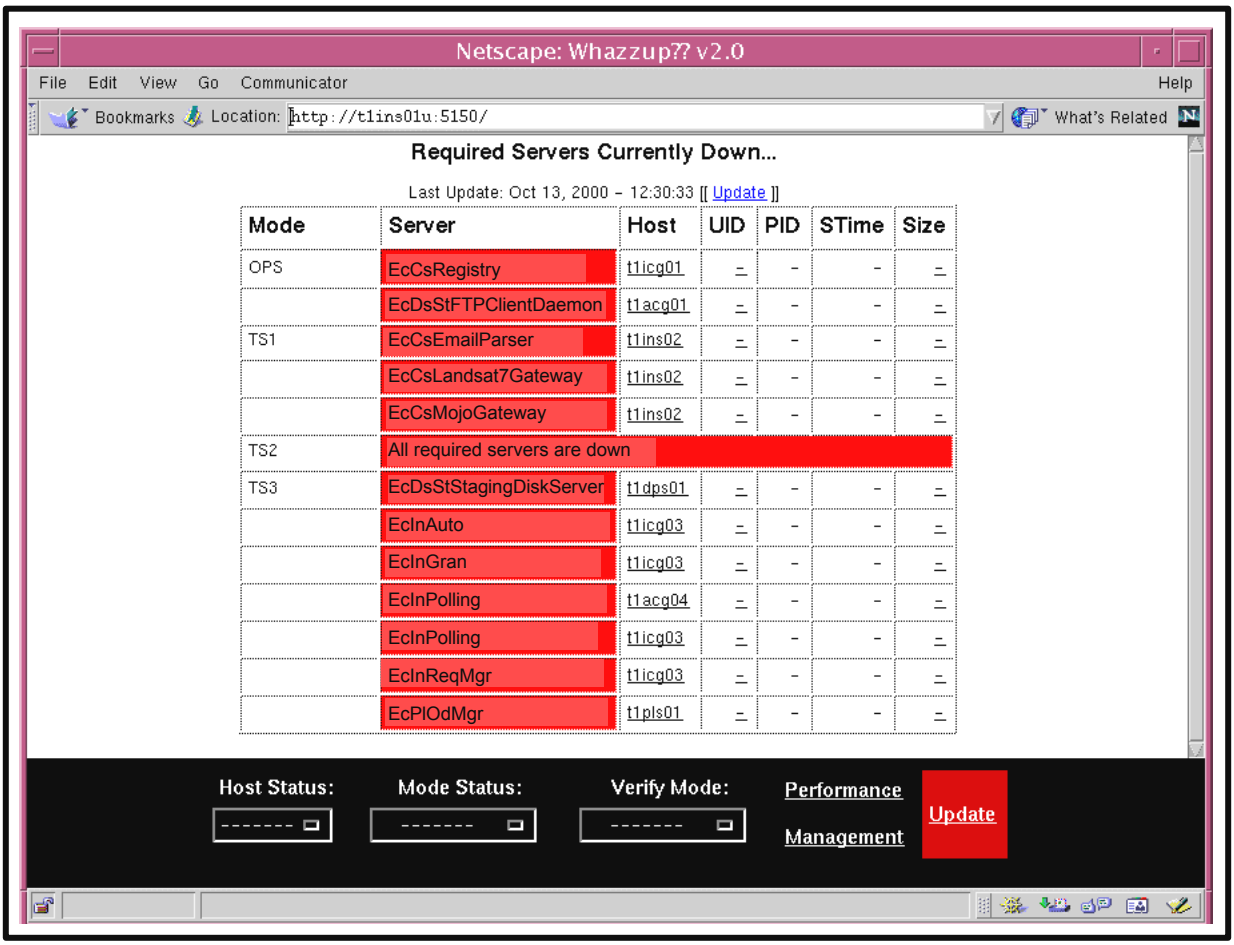

Figure 10. View of "What's Down"

Starting Whazzup and Monitoring the Status of Hosts and Servers

The Whazzup??? tool is accessible through use of a web browser. To access the tool and obtain a quick view of what servers may be down, use the following procedure.

Start Whazzup and View What's Down

1 On workstation ***x*0ins02**, at the UNIX prompt in a terminal window, type **netscape &** and then press the **Return/Enter** key.

- NOTE: The ***x*** in the workstation name will be a letter designating your site: **g** = GSFC, **m** = SMC, **l** = LaRC, **e** = LP DAAC, **n** = NSIDC, **o** = ORNL, **a** = ASF, **j** = JPL (e.g., **l0ins02** indicates an interface host workstation at LaRC).

2 In the location field, type **http://*x*0ins02u:5150** and press the **Return/Enter** key.

- NOTE: The ***x*** in the workstation name will be a letter designating your site: **g** = GSFC, **m** = SMC, **l** = LaRC, **e** = LP DAAC, **n** = NSIDC, **o** = ORNL, **a** = ASF, **j** = JPL (e.g., **l0ins02** indicates an interface host workstation at LaRC).

- The **EcMsWz-Whazzup???** screen is displayed.

3 At the bottom of the screen, click on the **Verify Mode** option button and, in the resulting pop-up menu, drag the cursor to highlight the option **What's Down**.

- The screen displays a table showing **Required Servers Currently Down . . .**, listing by mode the servers that are down.

4 Move the mouse to position the cursor on the **Performance** link, click the **Right Mouse Button**, and select **Open Link in New Window**.

- The **Performance Stats** screen is displayed in a new window, showing information that may help determine the reason for any servers being down.

5 If desired, click on the link for any host to obtain more detailed information.

- An information screen for the selected host is displayed, showing data on system memory, disk utilization, process information, and network information.

ECS Health Check GUI

The ECS Health Check GUI (Figures 11 and 12) indicates the status of the EcDmV0ToEcsGateway and Data Pool drill-down search engine. At a specified rate it sends inventory searches to the EcDmV0ToEcsGateway and/or submits granule search requests to the Data Pool. It provides warnings by the following means when a failure is registered by the GUI during the current search:

- Visual warning (including details about the time and nature of the error).
- Audible alarm (when implemented).
- E-mail message.

Starting and Using the ECS Health Check GUI

The ECS Health Check GUI is accessible on the Sun Consolidation Internal Server host. To access the tool and view the current status of the EcDmV0ToEcsGateway and/or Data Pool use the procedure that follows.

Start and Use the ECS Health Check GUI

1 Log in to the Sun Consolidation Internal Server host as cmshared.

- The EcCsHealthCheckStart script must be run by cmshared.
- Examples of Sun Consolidation Internal Server hosts include **g0acs11**, **e0acs11**, **l0acs03**, and **n0acs04**.
- For detailed instructions refer to the **Log in to System Hosts** procedure (previous section of this lesson).

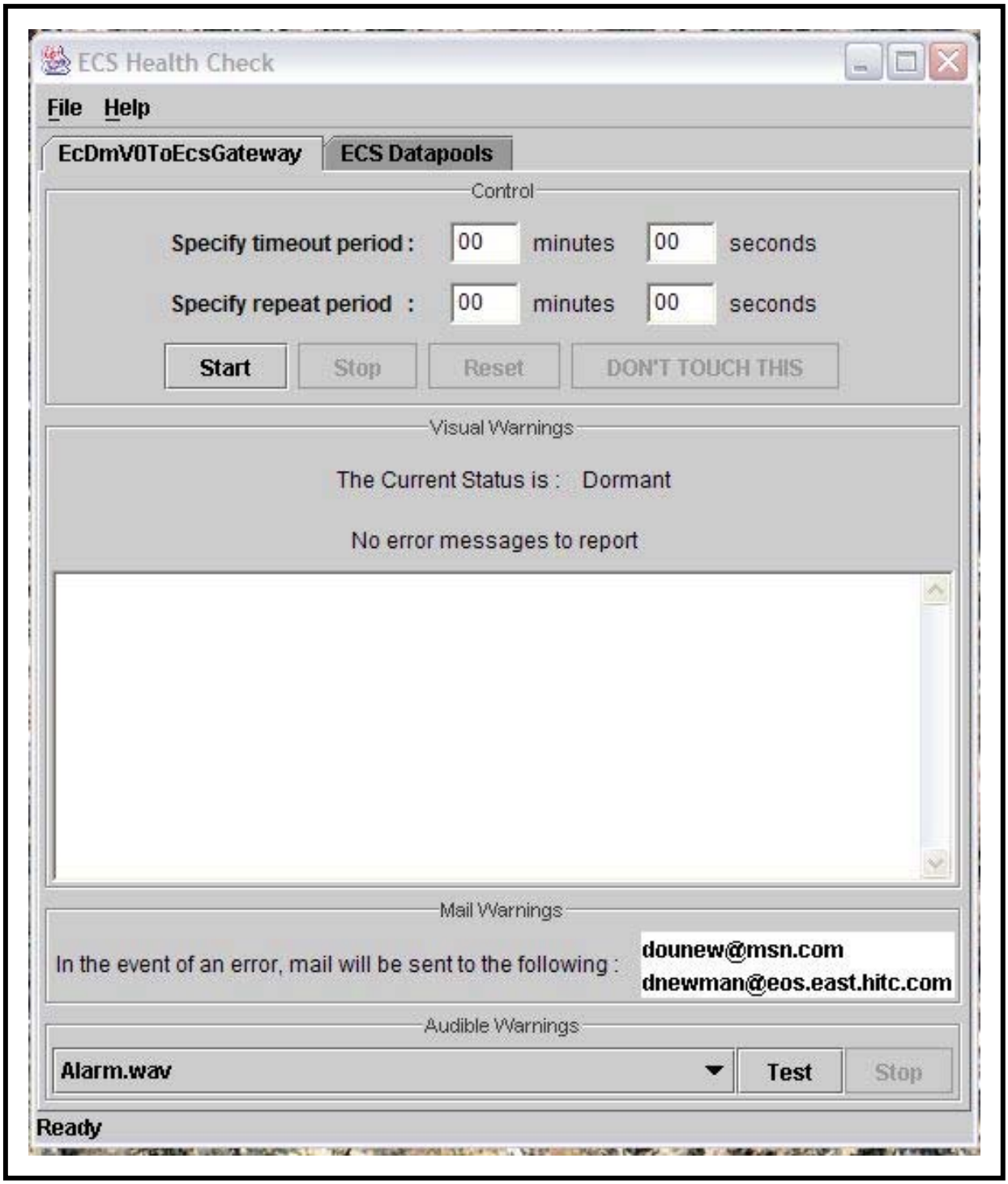

Figure 11. ECS Health Check GUI at Startup

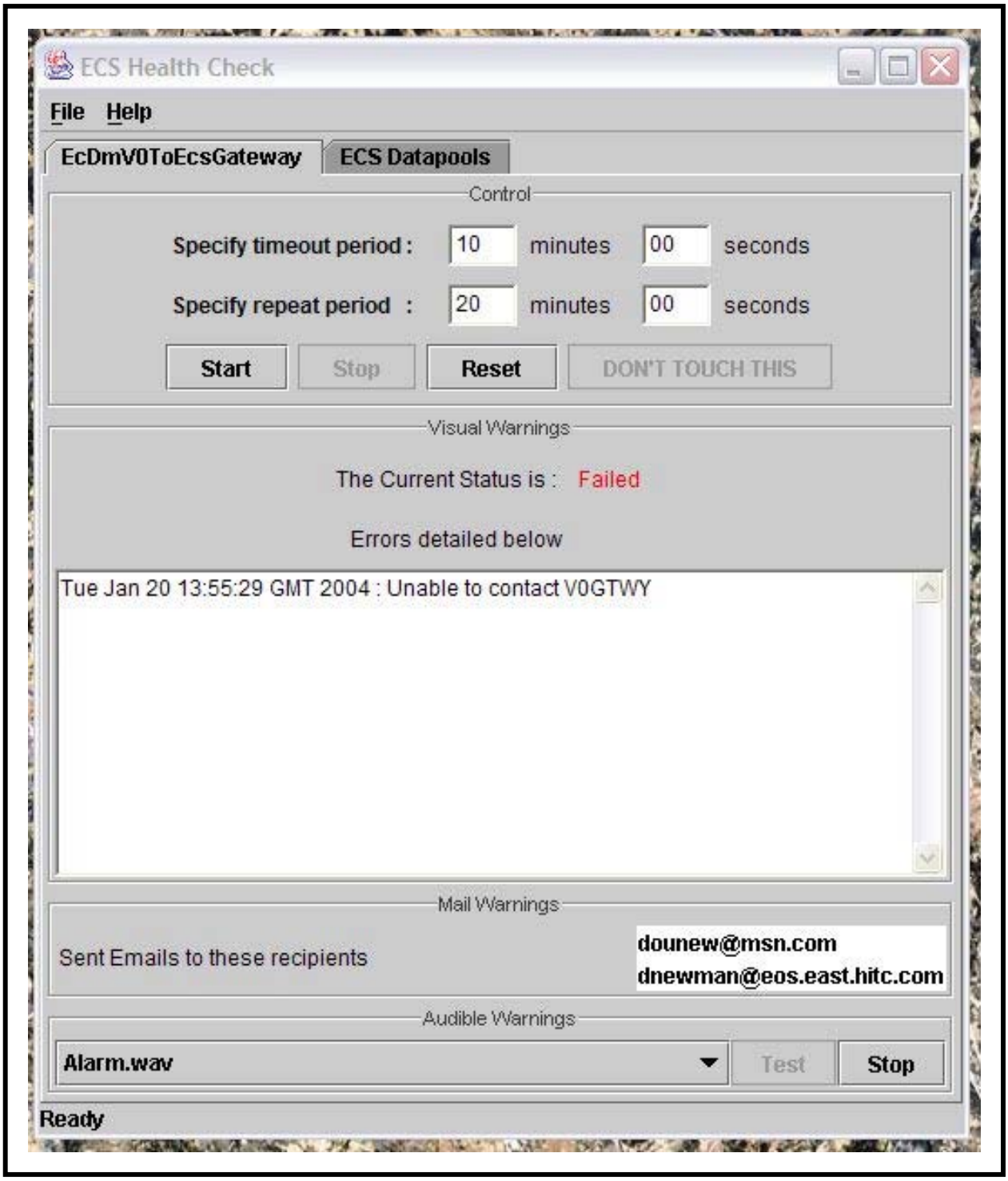

Figure 12. ECS Health Check GUI Having Detected an Error

2 At the UNIX prompt type **cd /usr/ecs/*MODE*/CUSTOM/bin/CSS** and then press the **Return/Enter** key.

- Change to the directory containing the start script (i.e., EcCsHealthCheckStart) for the ECS Health Check GUI.
- The location is different from that of most other system start scripts because the COTS dependency on the V0ImsClientSimulator application requires that the parent application be run in the same directory as the V0ImsClientSimulator binary.

3 At the UNIX prompt type **EcCsHealthCheckStart *MODE*** and then press the **Return/Enter** key.

- The ECS Health Check GUI is displayed.

4 Click on the appropriate tab for the area to be monitored.

- The following choices are available:
  - **EcDmV0ToEcsGateway.**
  - **ECS Datapools.**

5 In the **Specify timeout period: minutes** and **seconds** text entry boxes type the number of minutes and seconds (respectively) before timeout.

- **Timeout period** specifies how long the GUI will wait for a response from the current search before flagging an error.

6 In the **Specify repeat period: minutes** and **seconds** text entry boxes type the number of minutes and seconds (respectively) before repeating a search.

- **Repeat period** specifies how often the GUI sends an inventory search to the area being monitored.

7 Click on the **Start** button in the **Control** pane to start checking the selected area.

- The ECS Health Check GUI starts sending inventory searches to the selected area at the frequency specified in the **Specify repeat period** text boxes.
- **The Current Status is:** (as displayed on the GUI) changes from **Dormant** to **Running**.

8 Repeat Steps 4 through 7 to set up inventory searches of the other area (if applicable).

9 Observe information displayed in the **Visual Warnings** pane of the ECS Health Check GUI and listen for audible warnings (if enabled).

- Nothing much will appear to happen unless an error occurs in an inventory search sent to the EcDmV0ToEcsGateway/Data Pool, in which case the following indications will be evident (as shown in Figure 12):
  - **The Current Status is:** (as displayed on the GUI) changes from **Running** to **Failed** (in red).
  - Details concerning the time and nature of the error are displayed in the **Visual Warnings** text pane.
  - The **Mail Warnings** pane indicates that mail has been sent successfully to the recipients in the list.
  - A repeating audible alarm sounds (if enabled).
- If an error occurs in a search sent to the EcDmV0ToEcsGateway/Data Pool, no further inventory searches will be sent to the selected area unless restarted using the **Start** button in the **Control** pane (refer to Step 13).
- When an error occurs in an inventory search sent to the EcDmV0ToEcsGateway/Data Pool a detailed, time stamped description of the error is recorded in the EcCsHealthCheck.ALOG file in the /usr/ecs/*MODE*/CUSTOM/logs directory.

10 To stop an audible alarm (when applicable) click on the **Stop** button in the **Audible Warnings** pane.

- The alarm stops sounding.

11 To clear error information from the ECS Health Check GUI (when applicable) click on the **Reset** button in the **Control** pane.

- The error information is cleared from the ECS Health Check GUI.

12 To stop inventory searches of the selected area, (when applicable) click on the **Stop** button in the **Control** pane.

- The GUI goes to a Dormant state.

13 To restart inventory searches of the selected area, (when applicable) return to Step 7 (click on the **Start** button in the **Control** pane).

- The GUI goes to a dormant state.

14 To exit from the ECS Health Check GUI (when applicable) select **File → Exit** from the pull-down menu.

- The ECS Health Check GUI is dismissed.

ECS Assistant and ECS Monitor

The Whazzup tool provides a quick look capability to note whether any servers are down. The ECS Assistant and ECS Monitor tools provide additional easy-to-use tools that offer a server monitoring capability (ECS Monitor) as well as support for installation (ECS Assistant). ECS Assistant permits staging ESDTs and DLLs into their directories (CUSTOM/data/ESS for ESDTs and CUSTOM/lib/ESS for DLLs). Figure 13 shows the ECS Assistant GUI for access to manager functions (upper left) and the ECS Assistant subsystem manager GUI.

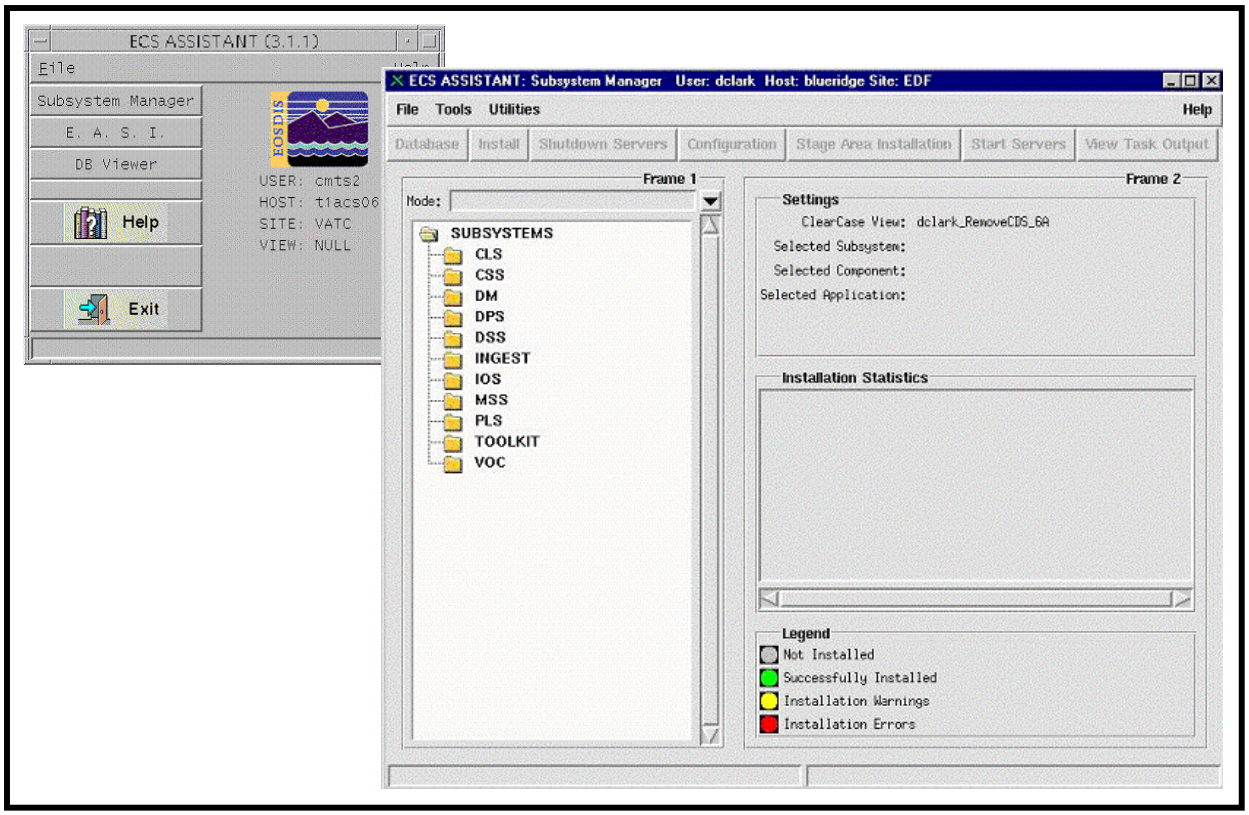

Figure 13. ECS Assistant GUI Manager Windows

To run the ECS Assistant, use the following procedure.

Starting ECS Assistant

1 Log in to one of the host machines.

2 At the UNIX prompt on the host from which the ECS Assistant is to be run, type **setenv ECS_HOME /usr/ecs**, and then press the **Return/Enter** key.

- To verify the setting, type **echo $ECS_HOME**, and then press the **Return/Enter** key.

3 At the UNIX prompt, type **cd /tools/common/ea**, and then press the **Return/Enter** key. Then type **EcCoAssist /tools/common/ea &**, and then press the **Return/Enter** key.

- **/tools/common/ea** is the path where ECS Assistant is installed, and also where EcCoScriptlib may be found.
- The ECS Assistant GUI is displayed.

4 At the ECS Assistant GUI, click the **Subsystem Manager** pushbutton.

- The Subsystem Manager GUI is displayed.

5 Select a mode by clicking on the down arrow at the right end of the **Mode** field and then on the desired mode name in the resulting list.

- The selected mode is displayed in the **Mode** field and colored indicators show the installation status for components in that mode on the host; the legend for the color indications is at the lower right on the Subsystem Manager window.

6 In the list of subsystems, double click on the name of the subsystem of interest.

- One or more component groups appear below the selected subsystem name.

7 Double click on the name of a component group.

- One or more application groups appear below the selected component group name.

8 Double click on the name of the application group of interest.

- The applications or servers in the selected group are listed below the name of the group.

9 Single click on the name of an application or server of interest.

- The selected application or server is highlighted.
- Detailed installation information is displayed in the **Installation Statistics** window.

ECS Monitor provides a convenient way to monitor the status of the servers by listing their up/down condition. The **ECS Monitor** GUI is shown in Figure 14, the status flag for a server indicates UP or DOWN showing whether or not that server is running, and for a server that is running, the window shows the process ID (PID), the user ID, and the start time. As of the second delivery of Release 6A, it is no longer possible to use ECS Monitor to *cdsping all servers*. Instead, there is a script that works with a *Sweeper* binary to ping the servers and clients in a mode to determine their status.

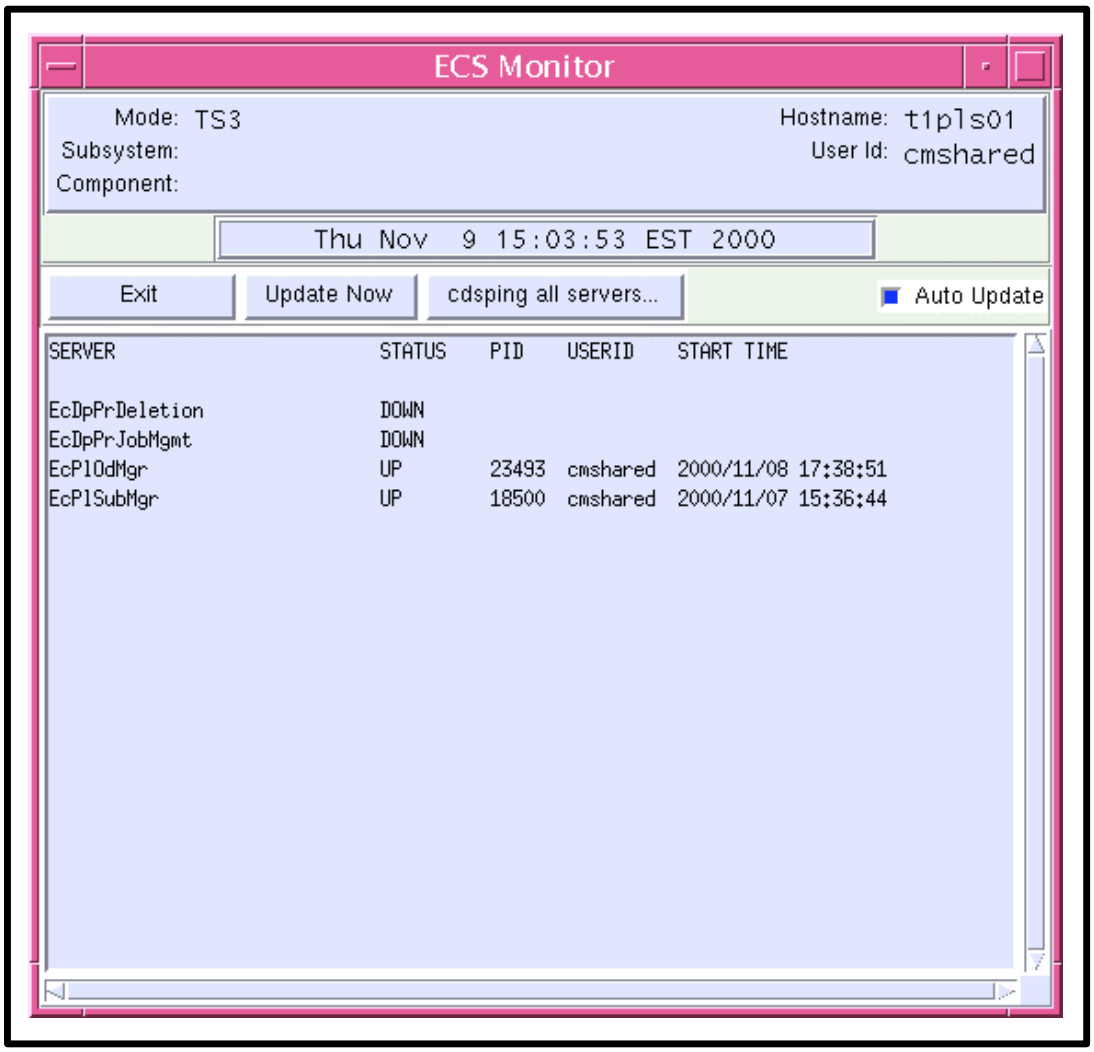

Figure 14. ECS Monitor GUI

To start up the ECS Monitor GUI, use the following procedure.

Using the ECS Assistant Server Monitor

1 Log in to one of the host machines.

2 At the UNIX prompt on the host from which the ECS Assistant Server Monitor is to be run, type **setenv ECS_HOME /usr/ecs**, and then press the **Return/Enter** key.

- To verify the setting, type **echo $ECS_HOME**, and then press the **Return/Enter** key.

3 At the UNIX prompt, type **cd /tools/common/ea**, and then press the **Return/Enter** key.

- /tools/**common/ea** is the path where ECS Monitor is installed.

4 Then type **EcCoMonitorGui /tools/common/ea <*mode*> &**, and then press the **Return/Enter** key.

- **/tools/common/ea** is the path where EcCoScriptlib may be found.
- The **ECS Monitor GUI** is displayed, showing the status (**UP** or **DOWN**) of the servers on the current host in the mode specified in the command, as indicated near the top left corner of the window.
- The status "**UP/DOWN**" indicates whether a listed server is running.

5 The **Server Monitor** GUI can be updated by clicking the **update** button in the GUI.

- This causes the list to update to the current status.

6 To monitor other servers, log in to other hosts and launch the ECS Monitor GUI in the desired mode, as in steps 2-4.

7 To exit, click the **EXIT** button.

- This terminates display of the monitor GUI.

Use the following procedure to ping servers.

Using EcCsIdPingServers to determine server status

1 Log in to one of the host machines.

2 At the UNIX prompt, type **cd /usr/ecs/<*MODE*>/CUSTOM/utilities**, and then press the **Return/Enter** key.

- The prompt reflects a change to directory **cd /usr/ecs/<*MODE*>/CUSTOM/utilities**, where **<*MODE*>** is likely to be **OPS**, **TS1**, or **TS2**.

3 Then type **EcCsIdPingServers <*MODE*>**, and then press the **Return/Enter** key.

- The result should appear similar to the following:

```
/usr/ecs/DEV03/CUSTOM/bin/CSS/Sweeper -nsh dss2 -nsp 22822
FoSwSweeper application started...
We made a connection with EntryId =g0icg01:17871:12451240 ---
EcSrTransportEcInGranServer
We made a connection with EntryId =g0ins02:22336:6737528 --- DsHrQuitIDL
We made a connection with EntryId =g0pls02:35211:25637 --- PlOdMsgDObj
We made a connection with EntryId =g0dis02:48315:18311 --- DsDdRequestMgrIDL
We made a connection with EntryId = g0ins02:17862:12461267 --- InAutoIngestIF
We made a connection with EntryId = g0dis02:49473:13375 --- DsStReqMgrIDL
We made a connection with EntryId = g0ins02:41566:13071 --- IoAdRpc
We made a connection with EntryId = g0ins02:18139:12460808 --- InRequestMgrIF
We made a connection with EntryId =g0dms03:42000:13266 --- EcSrTransportDDICT
We made a connection with EntryId = g0pls02:22359:6737528 ---
    DsHrNonConfIDL681ab65e-60bc-1024-8e70-08006902a6d6
We made a connection with EntryId = g0pls02:22346:6737528 ---
    DsHrConformantIDL681ab65d-60bc-1024-8e70-08006902a6d6
We made a connection with EntryId =g0mss21:64657:8006 --- EcAcOrderMgr
We made a connection with EntryId =g0mss11:41449:22898 --- EcSrTransportDarServer
We made a connection with EntryId = g0icg02:17724:12445092 --- EcRgRegistry
We made a connection with EntryId =g0mss11:41278:22739 --- InDDNTransferPkt
We made a connection with EntryId =g0psl02:35085:25466 --- Deletion
We made a connection with EntryId =g0pls02:35168:25584 --- SubscriptionQueue
We made a connection with EntryId =g0mss21:64700:8059 --- MsAcUsrRequestMgr
We made a connection with EntryId =g0mss21:64690:8059 --- MsAcRegUserMgr
We made a connection with EntryId =g0mss21:64695:8059 --- MsAcUsrProfileMgr
We made a connection with EntryId =g0pls02:35127:25527 --- DpPrSchedulerDObj
We made a connection with EntryId =g0ins02:22364:6738409 ---
    DsHrNonConfIDL681ab654-60bc-1024-8e70-08006902a6d6
We made a connection with EntryId =g0ins02:22353:6738409 ---
    DsHrConformantIDL681ab653-60bc-1024-8e70-08006902a6d6
We made a connection with EntryId =g0ins02:22342:6738409 --- DsHrQuitIDL
```

Problem Analysis/Troubleshooting

Although the system is designed to be a robust computer network system, the complexity of its hardware and software components and interfaces provides a wealth of potential sources for system failures or other non-conformance problems. Fortunately, the available tools provide several avenues of assistance to help you detect and isolate problems in the system. Furthermore, there is an accumulating information base at the web site for the System Monitoring and Coordination Center (SMC) that may provide helpful insights and tips in solving system problems. The SMC site is accessible through the following URL:

http://m0mss01.ecs.nasa.gov/smc/

At the site, click on the link for Frequently Asked Questions (FAQ).

Analysis/Troubleshooting: System

Some of the Commercial Off-The-Shelf (COTS) software products that are part of the system provide alerts or warnings when there are system problems. For example:

- WhatsUp Gold
  - Color alerts to indicate problems.
- AutoSys/Job Management Web Interface.
  - Color/auditory alerts to indicate job status/failures.

Many of the COTS products as well as the software developed specifically for the system generate error messages and event/activity messages to indicate errors and status. The interpretation of these messages and suggested corrective actions can be found in 609-EMD-001, *Release 7.10 Operations Tools Manual for the EMD Project*. Some products also generate logs to capture and provide more detailed information about indicated problems (e.g., WhatsUp Gold Activity Log).

As is ever the case with a complex system, the effectiveness of troubleshooting depends on knowledge of the system and its documentation, applied systematically to diagnose problems. Your knowledge and skill may be called upon only after a user or an operator has already attempted some problem solving (e.g., based upon error messages displayed directly to the screen) and then submitted a trouble ticket. The effectiveness of your troubleshooting is maximized by:

- thorough documentation of the problem.
  - date/time of problem occurrence.
  - hardware/software.
  - initiating conditions.
  - symptoms, including log entries and messages on GUIs/screens.

- verification.
  - identify/review relevant publications (e.g., COTS product manuals, system tools and procedures manuals).
  - replicate problem.
- identification.
  - review product/subsystem logs.
- analysis.
  - detailed event review (e.g., logs,).
  - troubleshooting procedures.
  - determination of cause/action.

Analysis/Troubleshooting: COTS Hardware

The system hardware is composed almost entirely of commercial, off-the-shelf (COTS) products, for which there are vendor maintenance warranties and/or COTS hardware support contracts. When a system problem is discovered, there is an initial troubleshooting/diagnostics procedure to be followed that is generic – i.e., not limited to hardware problems. However, when a hardware problem is indicated, the procedure refers the problem to the Maintenance Coordinator for hardware corrective maintenance. System troubleshooting tools and principles apply:

- WhatsUp Gold for quick assessment of status.
- Application and debug logs for sequence of events.
- Initial troubleshooting.
  - Review error message against hardware operator manual.
  - Verify connections (power, network, interface cables).
  - Run internal systems and/or network diagnostics.
  - Review system logs for evidence of previous problems.
  - Attempt system reboot.
  - If problem is hardware (e.g., software has been working and reboot is unsuccessful), report it to the Maintenance Coordinator – i.e., refer problem for preparation of a maintenance Work Order in Inventory/Logistical Management (ILM) software.

The ILM Tool

The ILM tool is an application of *Remedy*, a COTS package customized for the purpose. The ILM tool provides access to functions including entry and management of EIN (Equipment

Identification Number) information and management of the EIN structure for the system inventory, as well as entry of Maintenance Work Orders and other maintenance records. The sites use the ILM tools locally to create Maintenance Work Orders (MWOs) that record equipment maintenance activity. The EDF maintains the principal data repository and processes all inventory changes. All MWO changes are sent daily from the DAACs and merged into a consolidated ILM database. The ILM data changes made at the EDF are distributed daily to affected sites.

The ILM capabilities are used to:

- track and maintain all of the key data pertaining to EMD contract purchased equipment including hardware, COTS software and software licenses, COTS documentation (hardware and software), spares and consumable items, and Government Furnished Equipment
- store and maintain detailed maintenance data on hardware, to the component level, including corrective maintenance
- keep chronological histories (a record of transactions) of receipt, installation, and relocation of inventory items

The illustration in Figure 15 shows the Remedy **Open** dialog, from which the operator can select an item to launch the ILM-MWO form displayed in Figure 16.

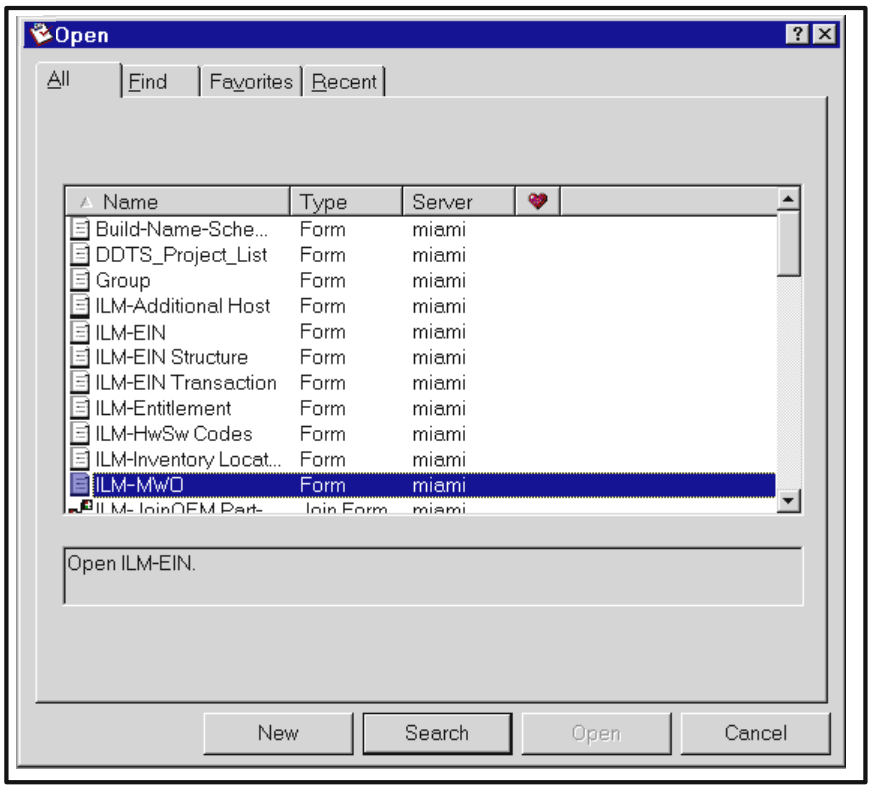

Figure 15. Remedy Open form (Note: Not all choices may appear)

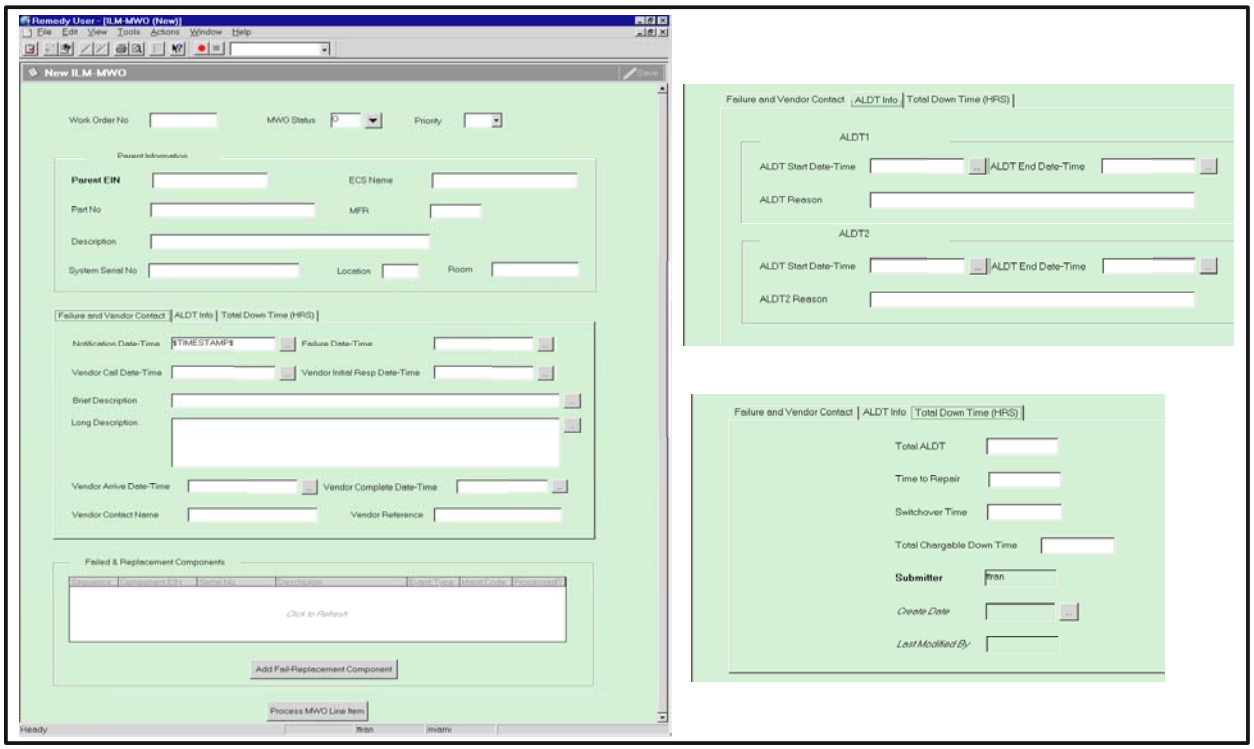

Figure 16. ILM-MWO Form

Maintenance Work Orders (MWOs) are the heart of Remedy's Maintenance Management functionality. They are used for collecting downtime information against equipment subject to Reliability, Maintainability, and Availability (RMA) reporting as well as to identify equipment that has failed and/or been replaced during system maintenance. By way of a special feature available to the ILM-MWO and the ILM-MWO Line Item forms, operators can have the system update property records automatically based on the maintenance activities a work order describes. Near the bottom of the ILM-MWO form are two buttons with unique functions:

- Add Fail/Replacement Component - provides access to the ILM-MWO Line Item Form (see Figure 17) for adding or accessing data about components involved in individual maintenance actions.
- Process MWO Line Item - The Process MWO Line Item button provides a convenient, reliable, and efficient means for updating ILM property records based on information contained in ILM-MWO line item form. New EIN records are created as necessary, as are corresponding Part No and EIN structure records. Processing adds new items to the system inventory, archives those that have failed or been returned to the vendor, and re-assigns any that have been relocated or returned to stock. Additionally, items returned to a vendor are rendered obsolete with respect to their parent EINs and, of those that had failed, costs are transferred to their replacements. If Remedy is to update property records based on ILM-MWO line item data, line item records must specify values for Event Type and Maint Code. They determine the type of property record changes to be made. Additionally, operators must supply a

value for New Parent EIN if an item is designated for relocation. Other line item fields, such as Component EIN, Change Date, Replacement's EIN, New Location, and New Room, have special significance as well in that they influence which database records actually change.

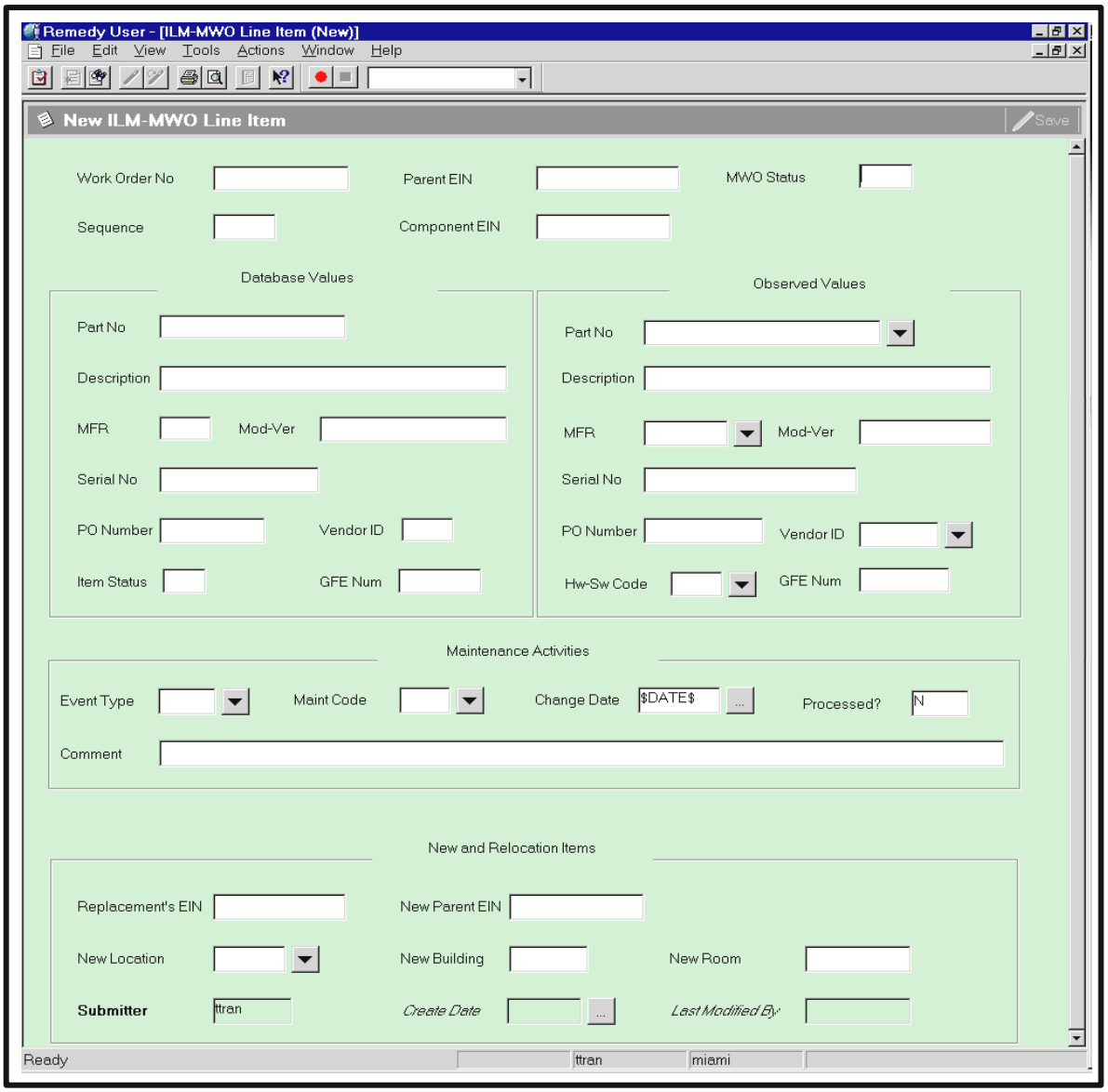

Figure 17. ILM-MWO Line Item Form

A problem that is not resolved through initial troubleshooting will often require troubleshooting teamwork by the Maintenance Coordinator, the System Administrator, and perhaps a Network Analyst. These troubleshooters may perform additional steps to resolve the problem:

- specific troubleshooting procedures described in COTS hardware manuals.
- non-replacement intervention (e.g., adjustment).

- replace hardware with maintenance spare.
  - locally purchased (non-stocked) item.
  - installed (hot-swappable, excess capacity) spares (e.g., RAID storage, power supplies, network cards, tape drives).

If the hardware problem is not resolved by the actions of the local staff, it may be necessary to request assistance through the Maintenance Coordinator from a maintenance contractor for on-site hardware support. Suppose, for example, that you are a Maintenance Coordinator and WhatsUp Gold has indicated a problem with one of the Sun workstations, that initial troubleshooting finds the workstation to be inoperable, that a hardware problem report has been forwarded to you, and that you and System Administrator cannot resolve the problem through additional troubleshooting. The workstation is hard down. The correct approach is:

- Organize the data on the problem and use ILM software to prepare a Maintenance Work Order.
- Call the support provider's technical support center to obtain on-site assistance.
  - Provide them with the background data.
  - Obtain a case reference number from them.
  - Update the ILM record to reflect the time and date of the call and the case number.
  - Notify the originator of the problem that the contractor is on the way.
- Arrange for site access for the maintenance technician.
  - Record arrival time.
  - Escort technician to hardware.
  - Assist in problem resolution (e.g., arrange equipment shutdown, demonstrate problem).
  - Obtain any needed technical references that are available at the site.
- Update the ILM record with actions taken to correct the problem and delay time experienced for the repair, including start/stop times and reasons for each delay.
- For any replaced part, update the ILM record with additional supporting data (Work Order Parts Replacement History).
  - Part number of the new item.
  - Serial numbers of the old and new items.
  - Equipment Identification Number (EIN) assigned to the new item (if applicable).

- Model number of replacement Line Replaceable Unit (LRU). [Note: If the model number of the replacement LRU is different from the part removed, a configuration change request (CCR) is required for configuration management.]
- Name of the item replaced.

The following procedures are applicable to help you implement this approach.

In preparation to request on-site hardware support from the maintenance contractor to repair the down Sun workstation, use the following procedure to obtain the background information needed.

Obtaining On-Site Hardware Support: Background Information

1 Collect information needed to obtain contract maintenance support.

- Obtain **make**, **model**, **serial number**, and **location** of the failed system from the hardware database.
- Obtain description of problem and symptoms from the **problem report**.
- Identify the **criticality** of the COTS hardware experiencing the problem.

2 Determine maintenance provider data.

- Obtain **name**, and **telephone number** of the maintenance provider.
- Obtain **access code** needed to obtain support.
- Obtain **telephone number** of the support provider's technical support center.
- Obtain **name** of site authorized contact person.

Once you have collected the background information you need to contact the maintenance vendor, make the contact and then enter a Work Order record into the ILM tool. Use the following procedure.

Use ILM to Prepare a Maintenance Work Order

1 Execute the aruser.exe application in the Windows environment (e.g., double click on the **aruser.exe** listing in a Windows Explorer window, or click on the **Start** button in the Windows taskbar and then click on the **Run . . .** option to open the **Run** dialog, from which you then enter the path for the **aruser.exe** application. A typical path is **c:\Program Files\Remedy\aruser.exe**, which may be entered or selected by clicking on the **Browse** button and navigating to the path. When the path is displayed in the **Open:** field of the **Run** dialog, click on the **OK** button.).

- A Remedy Action Request System logo window is displayed briefly, followed by a **Login – Remedy User** dialog box with entry fields for ID and password.

2 Type your Remedy user ID in the entry field for ID and type your password in the entry field for password.

- The typed user ID is displayed in its field and asterisks are displayed in the password entry field.

3 Click on the **Apply** button.

- The login dialog is dismissed and a Remedy Action Request System logo window is displayed briefly, followed by a Remedy initial screen from which a number of custom application forms may be launched.

4 Follow menu path **File→Open** or click on the leftmost button near the top of the window.

- The **Open** dialog box is displayed, showing choices including **ILM-MWO**.

5 Click on **ILM-MWO** to highlight it and then click on the **New** button.

- The **MWO Entry** screen is displayed.
- The system generated identifier for the work order is displayed in the **Work Order No** text field.

6 If it is desired to specify a code for the status of the work order, click on the pull-down arrow at the end of the **MWO Status** field and select the desired code.

- The **MWO Status** choices are **O** (Open), **A** (Audit), **F** (Finish), and **R** (Retired).
- The selected code is displayed in the field.

7 If it is desired to specify a priority for the work order, click on the pull-down arrow at the end of the **Priority** field and select the desired priority consistent with local policy and assessment.

- The selected priority is displayed in the field.

8 Click in the **Parent EIN** field.

- The cursor is displayed in the **Parent EIN** field.

9 Type the EIN of the parent item, and then press the **Return/Enter** key.

- The typed entry is displayed in the **Parent EIN** field, and data from the EIN file for the parent are displayed in the **ECS Name**, **Part No**, **MFR**, **Description**, **System Serial Number**, **Location**, and **Room** fields. The **Notification Date-Time** field displays the current date and time as an initial timestamp value, but the operator may change the value.

10 To bypass changing the **Notification Date-Time**, go to step 13; otherwise continue with step 11.

11 If it is desirable to change the **Notification Date-Time**, click at the end in the **Notification Date-Time** field.

- The cursor is displayed in the field.

12 Use one of the available methods to replace the displayed date and time with desired information to indicate the date on which notification of the problem was received.

- Available methods include backspacing to remove the displayed information and then typing the new information, dragging the cursor to highlight information to be replaced and then typing the new information, or clicking on the button to the right of the field and using the displayed calendar-time tools to select the desired date and time information to be displayed.
- The replacement information is displayed in the **Notification Date-Time** field.

13 Click in the **Failure Date-Time** field.

- The cursor is displayed in the field

14 Type the actual failure date (using format mm/dd/yy) and time (using format hh:mm).

- An alternative method to enter the information is to click on the button to the right of the field and use the displayed calendar-time tools to select the desired date and time information to be displayed.
- The entered information is displayed in the **Failure Date-Time** field.

15 Click in the **Vendor Call Date-Time** field.

- The cursor is displayed in the field.

16 Type the date (using format mm/dd/yy) and time (using format hh:mm) to specify when the vendor was called and informed of the problem.

- An alternative method to enter the information is to click on the button to the right of the field and use the displayed calendar-time tools to select the desired date and time information to be displayed.
- The entered information is displayed in the **Vendor Call Date-Time** field.

17 Click in the **Vendor Contact Name** field.

- The cursor is displayed in the field.

18 Type the name of the person who was contacted at the vendor.

- The typed entry is displayed in the **Vendor Contact Name** field.

19 Click in the **Vendor Reference** field.

- The cursor is displayed in the field.

20 Type any desired information in reference to the vendor (up to 20 characters) (e.g., it is a good idea to obtain a case number, which can be entered here).

- The typed entry is displayed in the **Vendor Reference** field.

21 Click in the **Brief Description** field.

- The cursor is displayed in the field.

22 Type a brief description of the problem (up to 70 characters).

- The typed entry is displayed in the **Brief Description** field.
- *Note*: A click on the button at the right of the field opens a text window for data entry; when this window is closed, up to 70 characters of entered information appears in the **Brief Description** field.

23 Click in the **Long Description** field

- The cursor is displayed in the field.

24 Type any desired longer description of the problem (up to 1024 characters).

- The typed entry is displayed in the **Long Description** field.
- *Note*: A click on the button at the right of the field opens a text window for data entry; when this window is closed, up to 1024 characters of the entered information appears in the **Long Description** field.

25 When you have completed entering information in the MWO fields, click on the **Save** button near the upper right corner of the window (or follow menu path **Actions→Save**) to save the MWO.

- The MWO is entered into the Remedy database.
- A message indicates **MWO *nnnnnn* was saved to the database**.

When the MWO is saved, the system copies all active children for the parent EIN into the work order. The operator may then use that MWO, modifying it to record and track details about the failure and its resolution.

- The Main **ILM-MWO** form is modified to record down times, and, when a vendor service call is complete, the vendor times and any appropriate notes.
- The **ILM-MWO Line Item** form accessible from the **ILM-MWO** form (by a click on the **Add Fail-Replacement Component** button, as previously mentioned) is used to designate which item(s) failed, and any new replacement parts, as well as accompanying notes.

Suppose that the vendor was called and has made a service call lasting one hour to isolate and repair the problem for which you created a Maintenance Work Order. The problem was isolated to one of the children of the parent EIN, which was replaced to complete the repair. Use the following procedure to document the down time and service call.

Use ILM to Update a Maintenance Work Order

1 Execute the aruser.exe application in the Windows environment (e.g., double click on the **aruser.exe** listing in a Windows Explorer window, or click on the **Start** button in the Windows taskbar and then click on the **Run . . .** option to open the **Run** dialog, from which you then enter the path for the **aruser.exe** application. A typical path is **c:\Program Files\Remedy\aruser.exe**, which may be entered or selected by clicking on the **Browse** button and navigating to the path. When the path is displayed in the **Open:** field of the **Run** dialog, click on the **OK** button.).

- A Remedy Action Request System logo window is displayed briefly, followed by a **Login – Remedy User** dialog box with entry fields for ID and password.

2 Type your Remedy user ID in the entry field for ID and type your password in the entry field for password.

- The typed user ID is displayed in its field and asterisks are displayed in the password entry field.

3 Click on the **Apply** button.

- The login dialog is dismissed and a Remedy Action Request System logo window is displayed briefly, followed by a Remedy initial screen from which a number of custom application forms may be launched.

4 Follow menu path **File→Open** or click on the leftmost button near the top of the window.

- The **Open** dialog box is displayed, showing choices including **ILM-MWO**.

5 Click on **ILM-MWO** to highlight it and then click on the **Search** button.

- The **Search RelB Contact Log** window is displayed.

6 Click on the field to be used for finding the MWO record to be updated (e.g., **Work Order No** field. **ECS Name** field, **Vendor Contact Name** field, or the **Vendor Reference** field).

- The cursor is displayed in the selected field.

7 Enter the information appropriate for the selected field (i.e., **Work Order No** field. **ECS Name** field, **Vendor Contact Name** field, or the **Vendor Reference** field).

- The typed entry is displayed in the field.

8 Follow menu path **Actions→Search**.

- The MWO record is displayed.

9 If the vendor contacted the site with a response prior to sending a representative to make the repair (e.g., called to request additional information on the problem, suggested a resolution other than on-site service), click in the **Vendor Initial Resp Date-Time** field.

- The cursor is displayed in the field.

10 Type the date (using format mm/dd/yy) and time (using format hh:mm) to specify when the vendor made the initial response to the service call.

- An alternative method to enter the information is to click on the button to the right of the field and use the displayed calendar-time tools to select the desired date and time information to be displayed.
- The entered information is displayed in the **Vendor Initial Resp Date-Time** field.

11 Click in the **Vendor Arrive Date-Time** field.

- The cursor is displayed in the **Vendor Arrive Date-Time** field.

12 Type the date (using format mm/dd/yy) and time (using format hh:mm) to specify when the vendor actually arrived to work on the problem.

- An alternative method to enter the information is to click on the button to the right of the field and use the displayed calendar-time tools to select the desired date and time information to be displayed.
- The entered information is displayed in the **Vendor Arrive Date-Time** field.

13 Click in the **Vendor Complete Date-Time** field.

- The cursor is displayed in the **Vendor Complete Date-Time** field.

14 Type the date (using format mm/dd/yy) and time (using format hh:mm) to specify when the vendor completed the repair.

- An alternative method to enter the information is to click on the button to the right of the field and use the displayed calendar-time tools to select the desired date and time information to be displayed.
- The typed entry is displayed in the **Vendor Complete Date-Time** field.

15 If there was no delay necessary before the start of the system repair, skip to step ??. Otherwise, proceed with step 16.

16 If there was a delay necessary before the start of the system repair, click on the **ALDT Info** tab for access to fields relating to Administrative Logistic Delay Time (ALDT).

- The screen displays two blocks of ALDT fields.

17 On the **ALDT1** block of fields, click in the **ALDT Start Date-Time** field.

- The cursor is displayed in the field.

18 Type the date (using format mm/dd/yy) and time (using format hh:mm) to specify the date and time when the ALDT began..

- An alternative method to enter the information is to click on the button to the right of the field and use the displayed calendar-time tools to select the desired date and time information to be displayed.
- The entered information is displayed in the **ALDT Start Date-Time** field of the **ALDT1** block.

19 On the **ALDT1** block of fields, click in the **ALDT End Date-Time** field.

- The cursor is displayed in the field.

20 Type the date (using format mm/dd/yy) and time (using format hh:mm) to specify the date and time when the ALDT ended..

- An alternative method to enter the information is to click on the button to the right of the field and use the displayed calendar-time tools to select the desired date and time information to be displayed.
- The entered information is displayed in the **ALDT End Date-Time** field of the **ALDT1** block.

21 On the **ALDT1** block of fields, click in the **ALDT Reason** field.

- The cursor is displayed in the field.

22 Type a brief description (up to 60 characters) of the reason for the delay.

- The typed entry is displayed in the field.

23 If a second delay was encountered before the repair, repeat steps **17 - 22** using the **ALDT2** block of fields to enter starting and ending date-time information and reason for additional delay time.

24 To access fields for specifying the down time that may be charged against availability, click on the **Total Down Time (HRS)** tab.

- The screen displays fields for specifying down time.

25 Click in the **Total ALDT** field.

- The cursor is displayed in the field.

26 Type the number of hours (may specify to two decimal places) that the system was unavailable because of ALDT.

- The typed entry is displayed in the field.

27 Click in the **Time to Repair** field.

- The cursor is displayed in the field.

28 Type the number of hours (may specify to two decimal places) that the system was unavailable during actual repair activities.

- The typed entry is displayed in the field.

29 If applicable, click in the **Switchover Time** field.

- The cursor is displayed in the field.

30 Type any time in hours (may specify to two decimal places) that the system was unavailable during switchover activities.

- The typed entry is displayed in the field.

31 Click in the **Total Chargeable Down Time** field.

- The cursor is displayed in the field.

32 Type the total number of hours (may specify to two decimal places) of down time that may be charged against availability.

- The typed entry is displayed in the field.

33 Click on the **Add Fail-Replacement Component** button near the bottom of the screen.

- The **ILM-MWO Line Item** GUI is displayed, showing the work order number of the current MWO in the **Work Order No** field.

34 Click in the **Parent EIN** field.

- The cursor is displayed in the **Parent EIN** field.

35 Type the EIN of the parent item.

- The typed entry is displayed in the **Parent EIN** field.

36 If it is desired to specify a code for the status of the work order, click on the pull-down arrow at the end of the **MWO Status** field and select the desired code.

- The **MWO Status** choices are **O** (Open), **A** (Audit), **F** (Finish), and **R** (Retired).
- The selected code is displayed in the field.

37 Click in the **Sequence** field.

- The cursor is displayed in the field.

38 Type a unique number (e.g., **1**) to identify the line item in the MWO.

- The typed entry is displayed in the field.

39 Click in the **Component EIN** field.

- The cursor is displayed in the field.

40 Type the identifier for the component to be failed/replaced by the maintenance action.

- The typed entry is displayed in the field.
- *Note*: If this field is left blank, the system will automatically create an inventory number with a C-prefix for it when the line item is processed.

41 Click on the pull-down arrow at the end of the **Part No** field of the **Observed Values** block of fields and select the Part Number for the component to be replaced.

- The selected Part Number is displayed in the **Part No** field and other Part data (i.e., **Description**, **MFR**, **Mod-Ver**, **Serial No**, **PO Number**, **Vendor ID**, **Item Status**, **Hw-Sw Code**, and **GFE Num**) are displayed in the **Database Values** and **Observed Values** blocks of the form.
- Although the GUI does not permit changes to the values in the fields of the **Database Values** block, the operator may update the Component EIN record in the **Observed Values** block to reflect the actual data of the Component EIN.

42 Click in the **Event Type** field.

- The cursor is displayed in the field.

43 Type a code to identify the type of maintenance event (e.g., for our example of replacement of a failed part, **F** is the appropriate code to enter).

- The entry must be one of the following: **N** (to indicate installation of a new item), **F** (to indicate replacement of a failed item), or **R** (to indicate replacement of a serviceable item).

44 Click in the **Maint Code** field.

- The cursor is displayed in the field.

45 Type a code to designate the disposition of the item (e.g., for our example, **V** is the appropriate code to enter).

- The entry must be one of the following: **R** (to indicate relocation of an item), **S** (to indicate the item is in stock), or **V** (to indicate item returned to vendor).

46 If the default current date displayed in the **Change Date** field is to be the date on which the change is effective, go to Step 49; otherwise continue with Step 47.

47 If it is desired to specify for the change an effective date other than the default current date, click at the end of the **Change Date** field.

- The cursor is displayed in the field.

48 Clear the displayed date information by backspacing, or drag the cursor to highlight the displayed date; then type the desired date (using format mm/dd/yy) to specify the date on which the change is to be effective.

- An alternative method to enter the information is to click on the button to the right of the field and use the displayed calendar tool to select the desired date information.
- The entered information is displayed in the **Change Date** field.

49 To enter brief comments or notes on the item, click in the **Comment** field.

- The cursor is displayed in the field.

50 Type any desired comments or notes (up to 60 characters) specific to the item.

- The typed entry is displayed in the field.

51 Click on the **Save** button near the upper right corner of the window (or follow menu path **Actions→Save**) to save the line item data to the database.

- The line item data are saved to the database.

52 Repeat Steps 37 - 51 for the replacement item being installed, except specifying the new serial number after Step 41, entering **N** at Step 43, and entering **S** at Step 45.

53 At the bottom of the ILM-MWO GUI, click on the **Process MWO Line Item** button.

- The GUI creates a record for the specified component EIN items, setting the installation date, receive date, and audit date to the value in the **Change Date** field. It also sets the item status to **I** and sets the **ECS Name**, **Location**, **Building**, and **Room** values for the component to that of the Parent EIN specified for the MWO itself.
- The GUI creates an OEM Part record if observed values for **Part No**, **MFR**, and **Description** are specified and the part record does not already exist.
- The GUI adds the EIN as a component of the new part specified as a component of the Parent EIN specified in the MWO. The EIN structure is rendered active as of the date specified in the **Change Date** field. The replaced component EIN is rendered obsolete in any EIN structures where it is active as of the date specified in the **Change Date** field.)
- The GUI creates an Inventory Transaction entry for an event of type **FAI** for the failed component part and **MWO** for the specified new component part.

54 Click on the **Save** button near the upper right corner of the ILM-MWO GUI window (or follow menu path **Actions→Save**) to save the MWO data to the database.

- The MWO record is saved to the Remedy database.
- A message indicates **MWO *nnnnnn* was saved to the database**.

55 To exit Remedy, follow menu path **File→Exit**.

- A confirmation dialog is displayed, permitting confirmation to close the application.

In unusual cases, it may be necessary to resort to non-standard hardware support procedures. In the event that the maintenance contractor's assigned technician is not providing timely successful repair, or if the maintenance action is otherwise unsatisfactory, it may be necessary to escalate the problem. In these cases the local maintenance coordinator should request escalation from the on-site maintenance technician. If further escalation is necessary, the local maintenance coordinator can request the ILS office to escalate the issue within the original equipment manufacturer vendor's system.

Performing Preventive Maintenance

There are few system hardware items that may require scheduled preventive maintenance. Notable items are the StorageTek (STK) robot and associated tape drives. Other items that may require periodic maintenance are the stackers and drives used for media distribution, and printers.

- Scheduled by the local Maintenance Coordinator.
- Coordinated with maintenance organization and using organization.
  - Scheduled to be performed by maintenance organization and to coincide with any corrective maintenance if possible.
  - Scheduled to minimize operational impact.
- Documented using ILM maintenance record.
  - Use *Preventative Maintenance* items screen to designate which items in the EIN file should have regularly scheduled maintenance.
  - Use *Generate PM Orders* screen to generate work orders for items needing preventive maintenance.

Analysis/Troubleshooting: COTS Software

The maintenance of COTS software items in the system requires the management of software maintenance contracts with software vendors. This element includes:

- maintaining software use licenses.
- obtaining telephone assistance in resolving COTS software problems.
- obtaining software patches.
- obtaining software upgrades.

COTS software vendor support is contracted by the EMD procurement office at the ECS Development Facility (EDF).

- First year is under warranty support.
- Subsequent support is acquired through contract extension/modification as needed.
- COTS software support contracts data are maintained in a database used by the EMD Integrated Logistic Support (ILS) office to monitor and track contract expiration dates and terms.
- Local Maintenance Coordinators (LMC) can request changes to COTS software support contracts by contacting ILS Support.
  - Phone contact can be made using the number 1-800-ECS-DATA (1-800-327-3282), selecting Option #3 and entering 0726 as the extension.

COTS Software Licenses

Licenses to use COTS software vary by the type of software and the software vendors' policies. License types include:

- per seat.
- per site.
- specific number of concurrent users.
- unlimited users.
- lifetime use without regard to number of users or location.

COTS software licenses are maintained in a property database. The EMD Property Administrator:

- maintains the master copy of COTS software license agreements.
- maintains the COTS software license database.
- distributes COTS software for installation at the DAACs.

The EMD Program reflects several different license restrictions based on the license types negotiated for the different COTS software products used. In general, the license restrictions are imposed through a software program that runs on a license server at the DAAC. It tracks the instances of a program in use, and when the limit is reached, it precludes access by additional operators until use falls below the limit.

Installing COTS Software

The approval of appropriate CCBs is required prior to the loading of COTS software upgrades or other packages on any system platform. The approval process requires systematic Configuration Management (CM) procedures and documentation to ensure appropriate control of the system baseline and of changes to the baseline. Once the approval is received, the site Local

Maintenance Coordinator notifies those personnel who will accomplish the installation (e.g., Release Installation Team, System Administrator, Network Administrator, Software Maintenance Engineer).

For EMD, there is one major tool used to facilitate CM control of software installation:

- **ClearCase®** – Provides a mountable file system that is used to store version-controlled data, such as source files, binary files, object libraries and spreadsheets.

The ClearCase® tool is used primarily for the Science Software Integration and Test (SSI&T) function, but it is also applied to control changes in custom software and customized portions of some COTS software packages (e.g., configuration files).

At the DAAC, the COTS software installation actions are executed by the DAAC Software Maintenance Engineer and the System Administrator, with support as needed from Development. Installation proceeds systematically. The installation is generally straightforward:

- the COTS software is installed with any needed customization (e.g., configuration files).
- the Version Description Document (VDD) gets final updates for system and center-specific material identified by ESDIS or the operational centers, and the final VDD is available.

Safeguarding COTS Software Media

Any residual COTS software media and commercial documentation should be protected by appropriate means. For example, it may be desirable to store them in locked cabinets provided for the purpose at the DAAC. Should there be a need for access to these materials (e.g., a requirement to reload a COTS software product), keys for these cabinets can be made available from the Operations Coordinator during operating hours.

Obtaining COTS Software Support

Support of COTS software involves both site capability and contracted support. Site support is provided by the System Administrator and the Software Maintenance Engineer. When site support personnel confirm that a problem is attributable to the COTS software, the COTS Software vendor's technical support center/help desk is contacted by authorized personnel at the site. When a system problem is discovered, there is an initial troubleshooting/diagnostics procedure to be followed that is generic – i.e., not limited to software problems. However, when a software problem is indicated, the procedure refers the problem to the Maintenance Coordinator for software corrective maintenance. System troubleshooting tools and principles apply:

- Review server logs for sequence of events.
- Initial troubleshooting.
  - Review error message against software operator manual; prepare trouble ticket.

- Review system logs for evidence of previous problems.
- Attempt software reload.
- If problem is software (e.g., hardware has been working and reload does not correct the problem), report it to the Maintenance Coordinator – i.e., forward the trouble ticket.

A problem that is not resolved through initial troubleshooting will often require troubleshooting teamwork by the Maintenance Coordinator, the System Administrator, and perhaps a Network Analyst. These troubleshooters may perform additional steps to resolve the problem:

- specific troubleshooting procedures described in COTS software manuals.
- review of the software vendor's web site's solutions database to learn of any solutions for similar problems.
- exercise any embedded or down-loadable software diagnostic routine that will determine the status of the COTS software on the equipment.
- exercise of any locally devised troubleshooting/diagnostic procedures.
- non-replacement intervention (e.g., adjustment of thresholds or other tunable parameters).

If the software problem is not resolved by the actions of the local staff, it may be necessary to request assistance through the Maintenance Coordinator from a maintenance contractor for on-site software support. Suppose, for example, that you are a Maintenance Coordinator and the site Software Maintenance Engineer has determined there is a problem with one of the COTS software packages used for Configuration Management, that initial troubleshooting finds the problem unable to be corrected locally, that a trouble ticket has been forwarded to you, and that you and System Administrator are not able to resolve the problem through additional troubleshooting. The correct approach is:

- Organize the data on the problem, find data on the appropriate support provider, and update the trouble ticket with this information.
  - Locate information such as software vendor technical support center/help desk telephone numbers, names of personnel authorized (by site and software) to contact the vendor, and the authorization/access codes available to the site's Local Maintenance Coordinator from the EMD ILS office.
- Contact the support provider's technical support center/help desk to obtain on-site assistance.
  - Provide them with the background data.
  - Obtain a case reference number from them.
  - Update the trouble ticket to reflect the time and date of the call and the case number.

- Notify the originator of the problem that the contractor has been alerted to the problem.

- Maintain coordination with the vendor for the solution and ensure compliance with Configuration Management requirements.
  - Software vendor's technical support center/help desk verifies contract support authorization and assists in pinpointing the COTS software problem to provide a recommended solution.
  - Solution may include a patch, a work-around, or a fix in a future release of the software.
  - Assist in problem resolution (If a patch exists to correct the problem, the patch will be identified and provided by the software vendor over the Internet or mailed to the requester. If a patch is required but not available, the requester and the vendor together determine the seriousness of the problem. If the problem is critical, a temporary patch or work-around may be provided, with permanent solution to be implemented in a future update or release.).
  - The DAAC and Project Configuration Control Boards (CCBs) must authorize the patch to be installed as a permanent solution. This decision may be made after the fact, in accordance with emergency procedures required to continue to operate.

- Update trouble ticket with actions taken to correct the problem and delay time experienced for the solution, including reasons for each delay.

In preparation to request software support from the software vendor to resolve the problem, use the following procedure to obtain the background information needed.

Obtaining On-Site Software Support: Background Information

1 Collect information needed to obtain contract maintenance support.

- Obtain **version**, **release**, **serial number**, and **location** of the failed software from the software database.
- Obtain description of problem and symptoms from **trouble ticket**.
- Identify the **criticality** of the COTS software experiencing the problem.

2 Locate information on the software support vendor.

- Obtain **name**, and **telephone number** of the software support vendor.
- Obtain **access code** needed to obtain support.
- Obtain **telephone number** of the software support vendor's technical support center.
- Obtain **name** of site authorized contact person.

3 Record data on maintenance needed and maintenance provider into the trouble ticket.

Troubleshooting of Custom Software

During operations, master copies of the custom software code are maintained at the ECS Development Facility (EDF). However, there may be a need to change the baseline configuration established at a given site. Changes can be driven from many sources, including the Deployment organization. When changes are approved, the Deployment organization performs the modification.

- Software Change Manager, ClearCase®, provides the vehicle to store and maintain the local library.
- Governing policies and minimum developed software component level that may be removed from (checked out for maintenance) or reintroduced to the master library are defined by the developers' determination of code modules.
- Configuration Management (CM) requirements apply (e.g., for configuration identification, configuration change control, and configuration status accounting).

Maintenance changes to the system baseline may come from any of several sources, such as:

- Changes directed by the EMD CCB.
- Site-level CCB-directed changes to configuration items, subject to ESDIS delegation of responsibility for site-level control (e.g., science software).
- Developer modifications or upgrades.
- User- or operator-initiated trouble tickets.

Implementation of Modifications

A controlled build procedure provides structure for the implementation of changes.

- Each EMD organization selects a responsible engineer (RE) for each build.
- The EMD system RE establishes the set of CCRs to be included in the system build.
- Site/center REs determine applicability of any site-unique extensions for the build.
- System and center REs establish schedules for implementation, integration, and test.
- The EMD system RE maintains the integrated system- and center-specific CCR list and schedule.
- The EMD system RE maintains the VDD, updating it with authorized changes. Center REs provide appendices as needed to describe any center-unique additions/modifications to the build.
- The RE (or designated team) for a CCR uses the configuration-controlled library at EDF to obtain the correct version of the source code/files. The RE/team implements

the change, performs programmer testing, and updates the documentation (design, interface, and procedures documents).

Obtaining Custom Software Support

Note: The maintenance of science software and data items provided by the Science Computing Facilities (SCFs) is not the responsibility of the EMD on-site maintenance engineers. Problem resolutions and changes to this software will be handled under the auspices of local DAAC CM activities and the ESDIS CCB in the same manner as new releases to baselined science software.

Problems with project-developed custom software are one type of impetus for generating trouble tickets (TTs):

- Anomalies.
- Apparent incorrect execution by a software configuration item.
- Inefficiencies.
- Sub-optimal use of system resources.
- TTs may be submitted by users, operators, customers, analysts, maintenance personnel, and management staff.
- TTs capture supporting information and data related to the problem.

Troubleshooting is conducted on an ad hoc basis. Just as with COTS software problems, however, it is conducted systematically.

- Site-level activity is initiated by the Operations Supervisor assigning a trouble ticket to the Problem Investigator.
- Problem Investigator contacts DAAC Help Desk if necessary, where support may be obtained from Sustaining Engineering Maintenance Programmers, Responsible Engineers, and Developers at the ECS Development Facility (EDF).
- EDF has the same software and computer equipment variants as the sites, and may be able to duplicate anomalies seen in an on-site system to derive effective resolutions or work-arounds as required until a permanent solution can be implemented.
- A Problem Review Board assigns a priority and the problem is assigned to an organization for work-off. The organization assigns a Responsible Engineer to work off the TT or Non-Conformance Report (NCR). Using the data captured in the TT, the Responsible Engineer conducts a technical investigation to attempt to isolate the source of the reported problem.
- If the problem is caused by a non-ECS element (e.g., an interface problem with an external system, poor resource usage by a science algorithm, poor performance by a non-ECS service), the TT and supporting data are provided to the maintainer of that element. A CCR may also be proposed to protect the system from potential threats of future problems identical or similar to that documented in the TT.

General System Troubleshooting

The troubleshooting approach presented here is derived in part from procedures applicable during system installation and general checkout, but it also includes procedures applicable for analyzing symptoms or problems encountered in specific operations involving specific subsystems. Many system problems can be traced to accessibility and communications among the multiple clients and servers on which system functions are so heavily dependent. Figure 18 provides a chart identifying problem categories at a top level. In the chart, each category is listed in a separate box with an associated identifying number and a reference to a numbered procedure for troubleshooting problems in that category. Figures 19 through 35 constitute a series of flow charts reflecting the numbered procedures. The numbered procedures with detailed troubleshooting steps are presented in the pages following Figure 35. If a problem presents specific symptoms suggesting a failure of a type known to be associated with a specific subsystem or a specific function (e.g., Ingest, Planning, Data Processing, Data Distribution), it may be helpful to refer to troubleshooting guidance and procedures presented in lessons addressing that subsystem or function. Otherwise, use the top-level chart in Figure 18 to locate an appropriate detailed flowchart and step-by-step procedure for troubleshooting. The detailed charts in Figures 19 through 35 depict troubleshooting flow and decisions. Exit from the flow reflects either resolution of the problem or failure to identify and resolve it. If the problem cannot be identified and resolved without help within a reasonable period of time, the appropriate response is to call the help desk and submit a trouble ticket in accordance with site and system Problem Management policy.

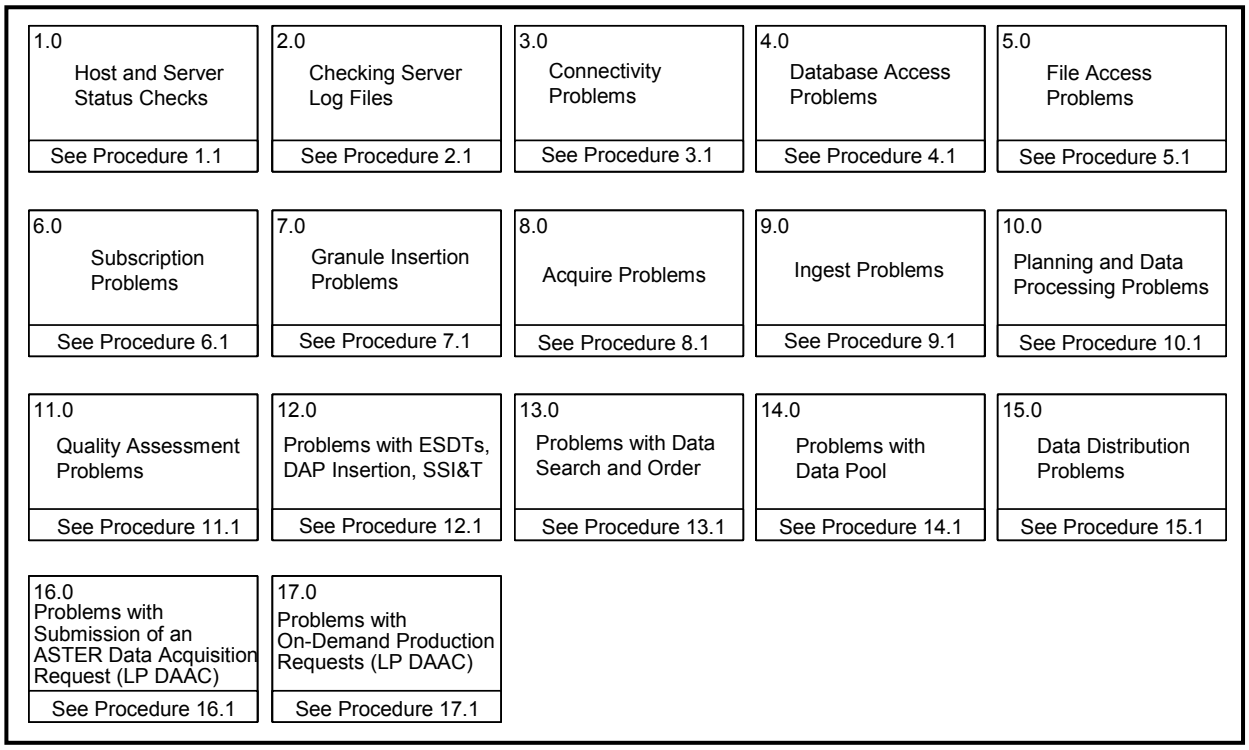

Figure 18. Top-Level Problem Categories

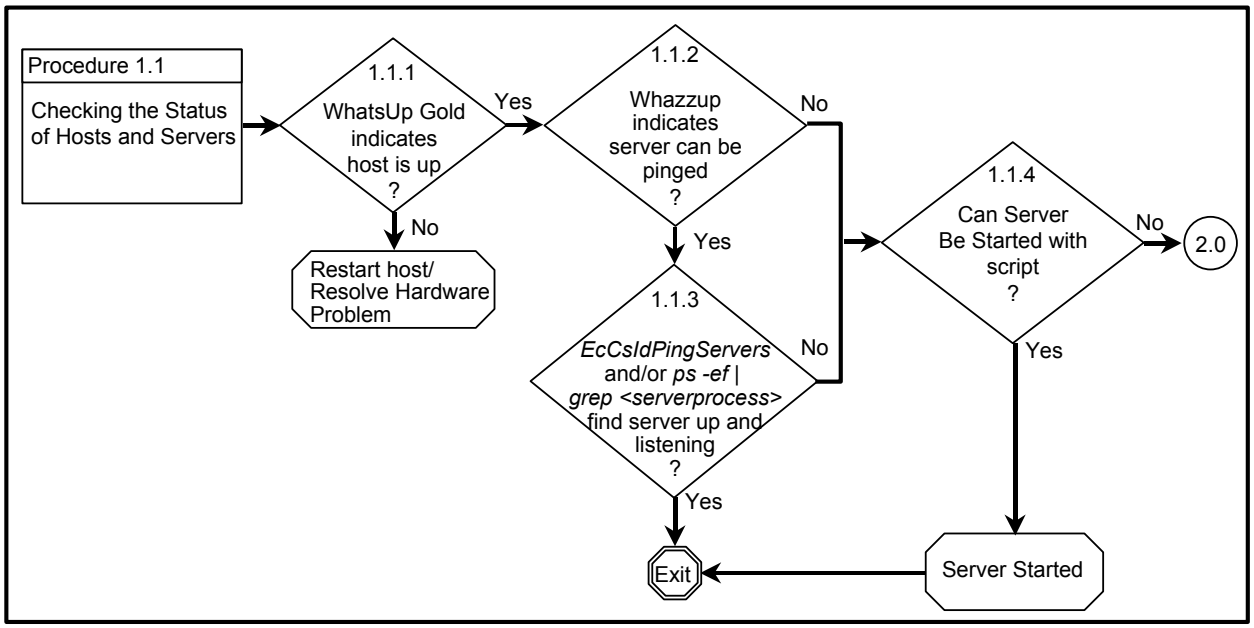

Figure 19. 1.0: Host and Server Status Checks

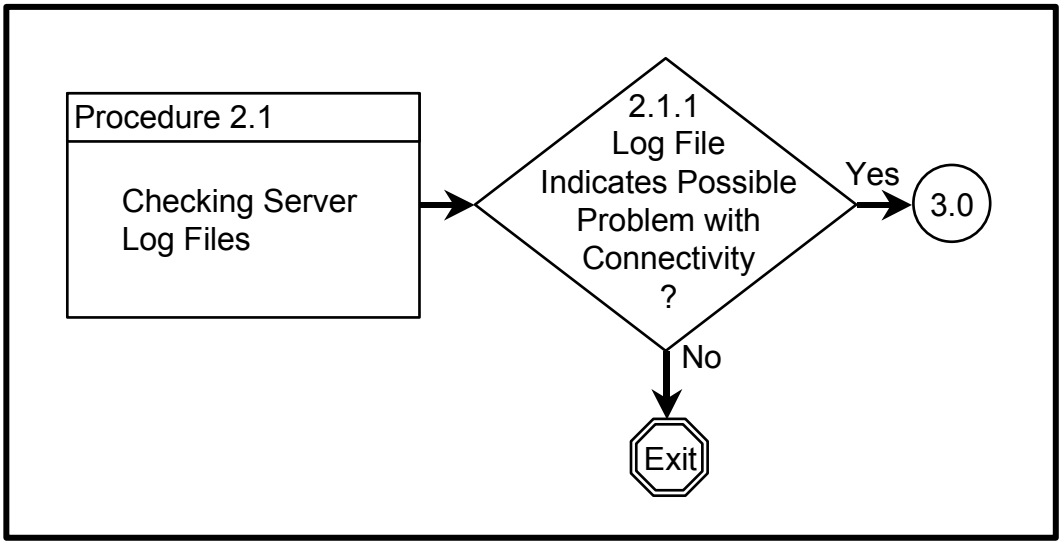

Figure 20. 2.0: Checking Server Log Files

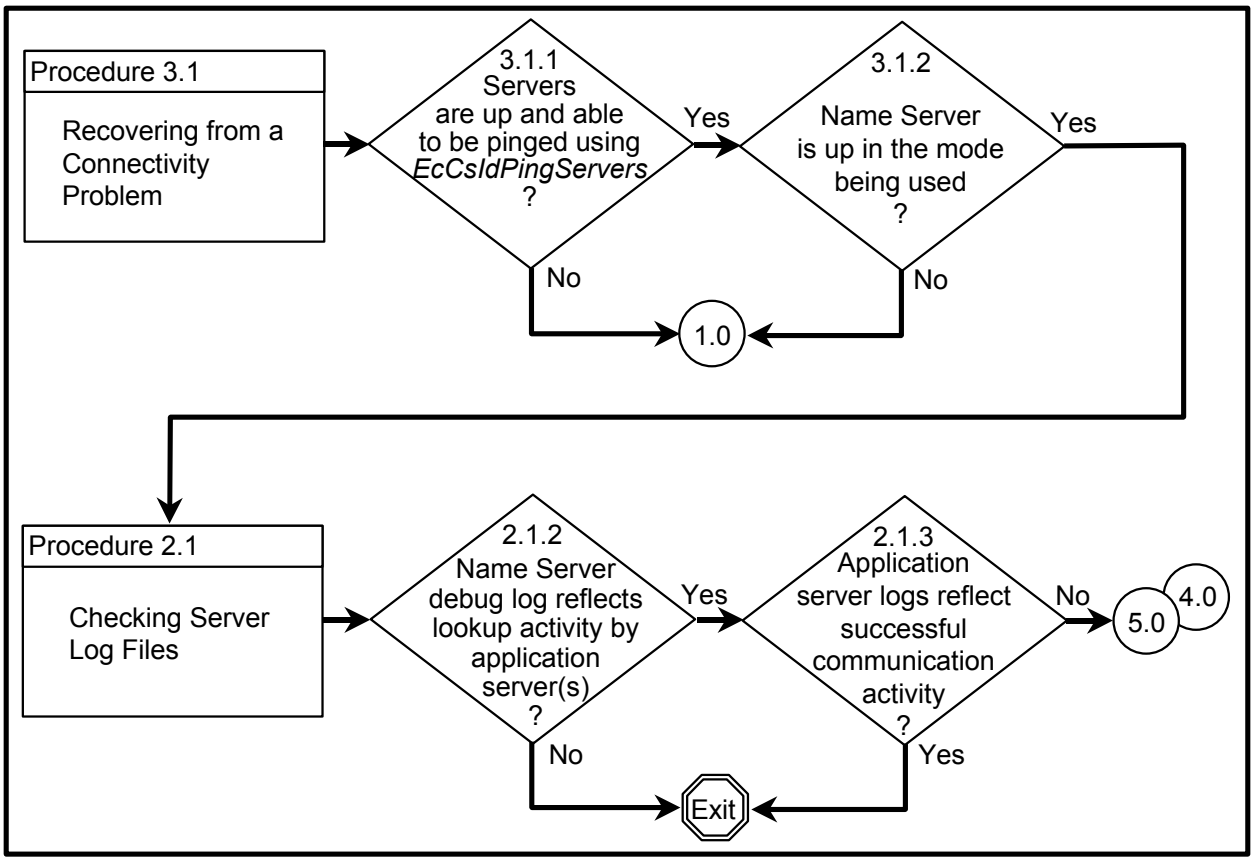

Figure 21. 3.0: Connectivity Problems

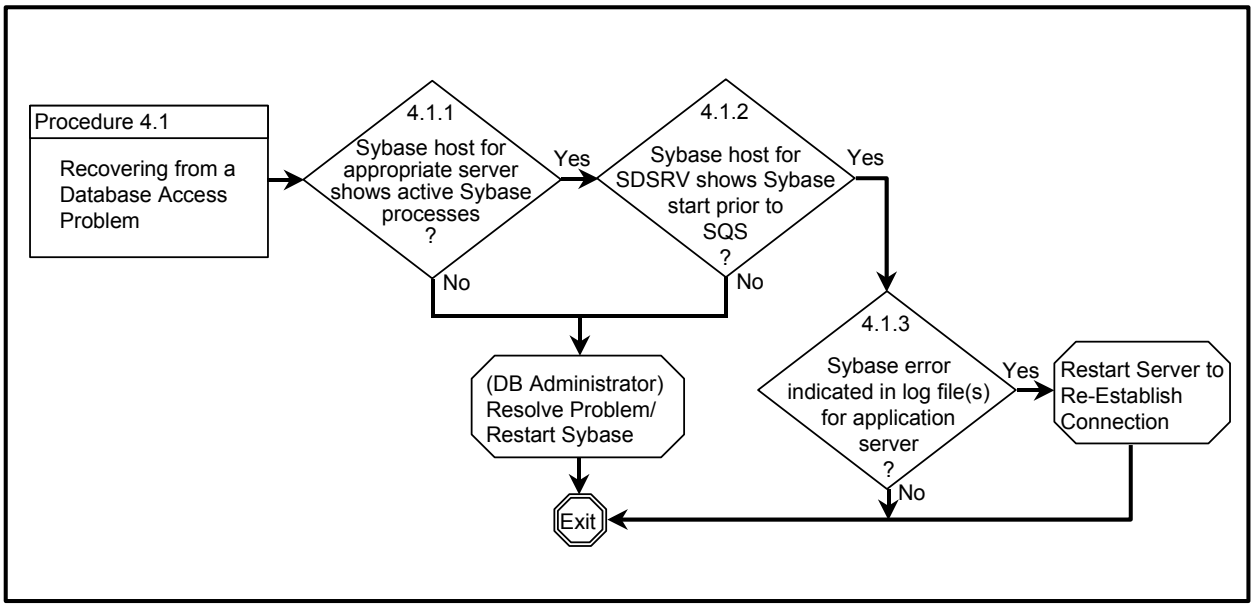

Figure 22. 4.0: Database Access Problems

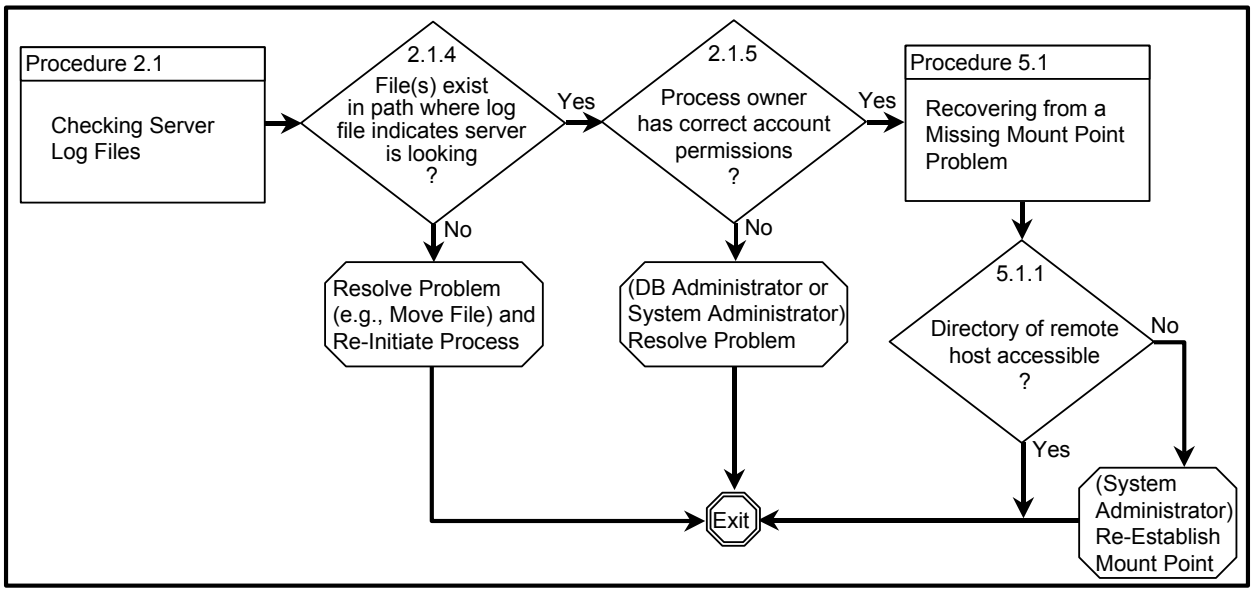

Figure 23. 5.0: File Access Problems

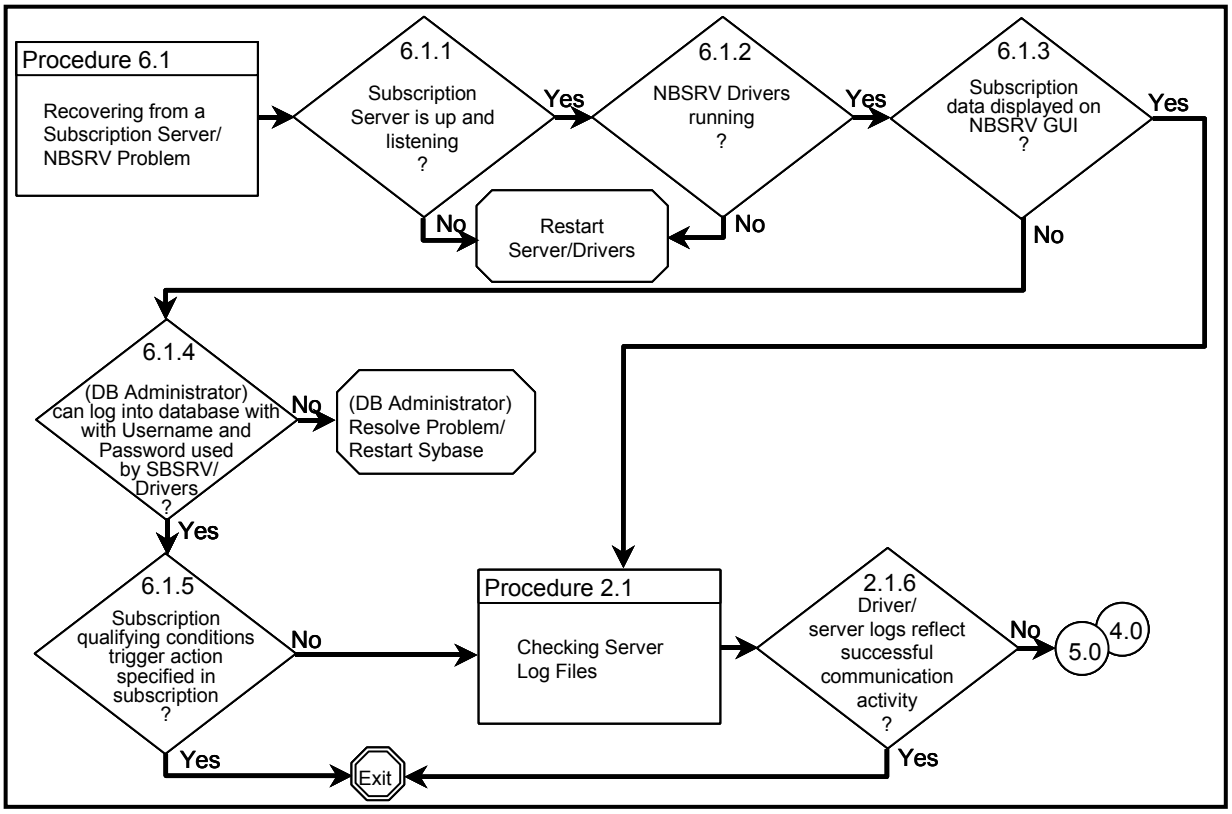

Figure 24. 6.0: Subscription Problems

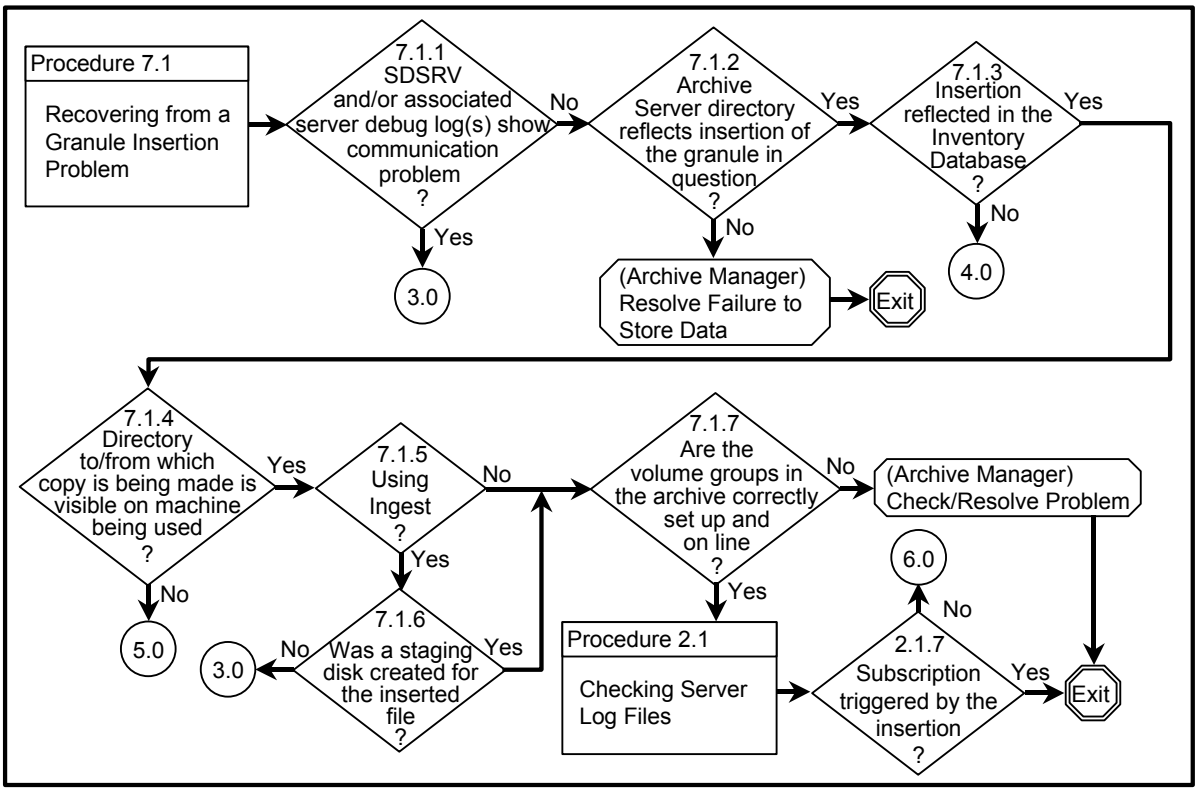

Figure 25. 7.0: Granule Insertion Problems

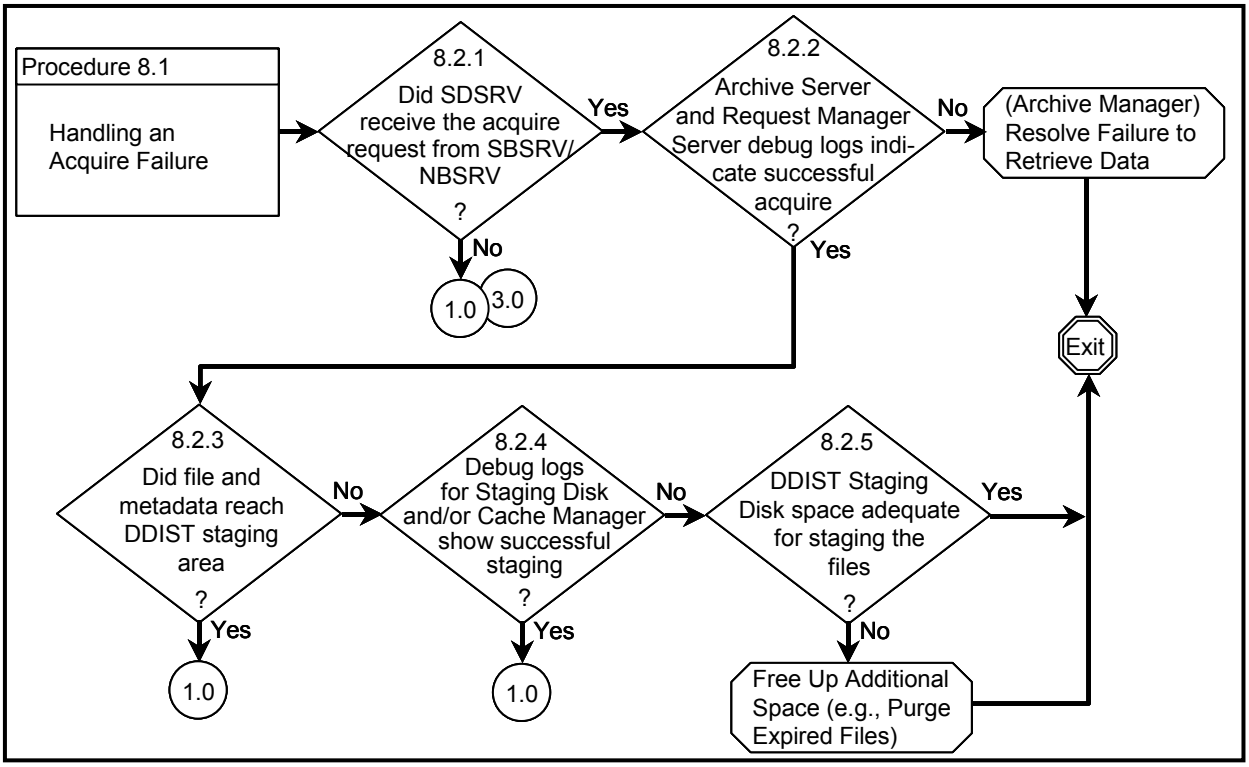

Figure 26. 8.0: Acquire Problems

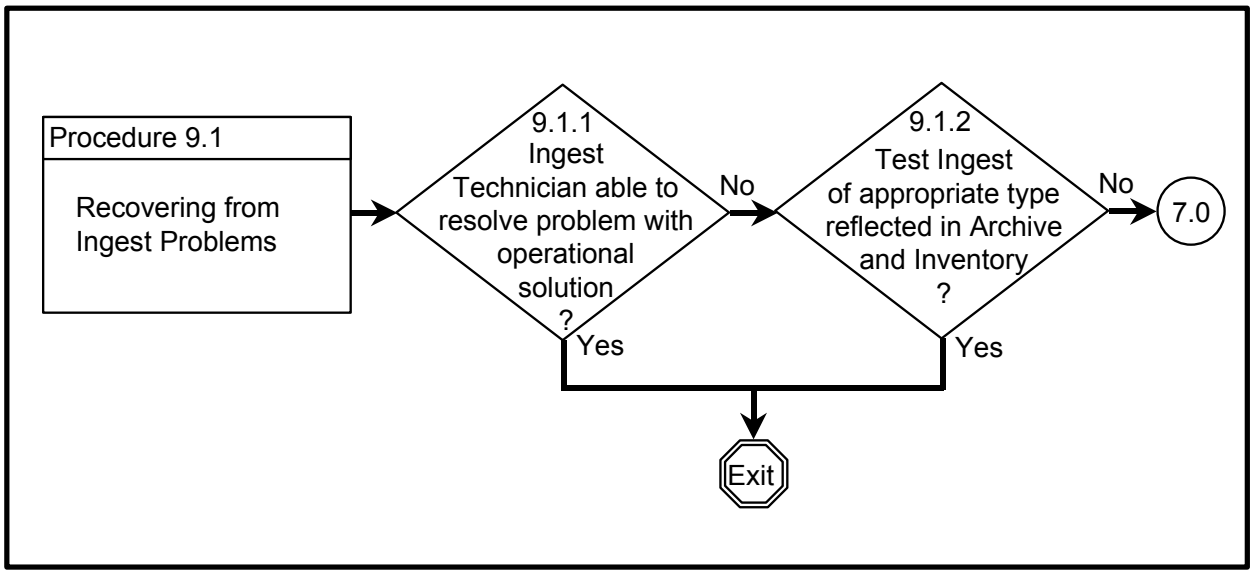

Figure 27. 9.0: Ingest Problems

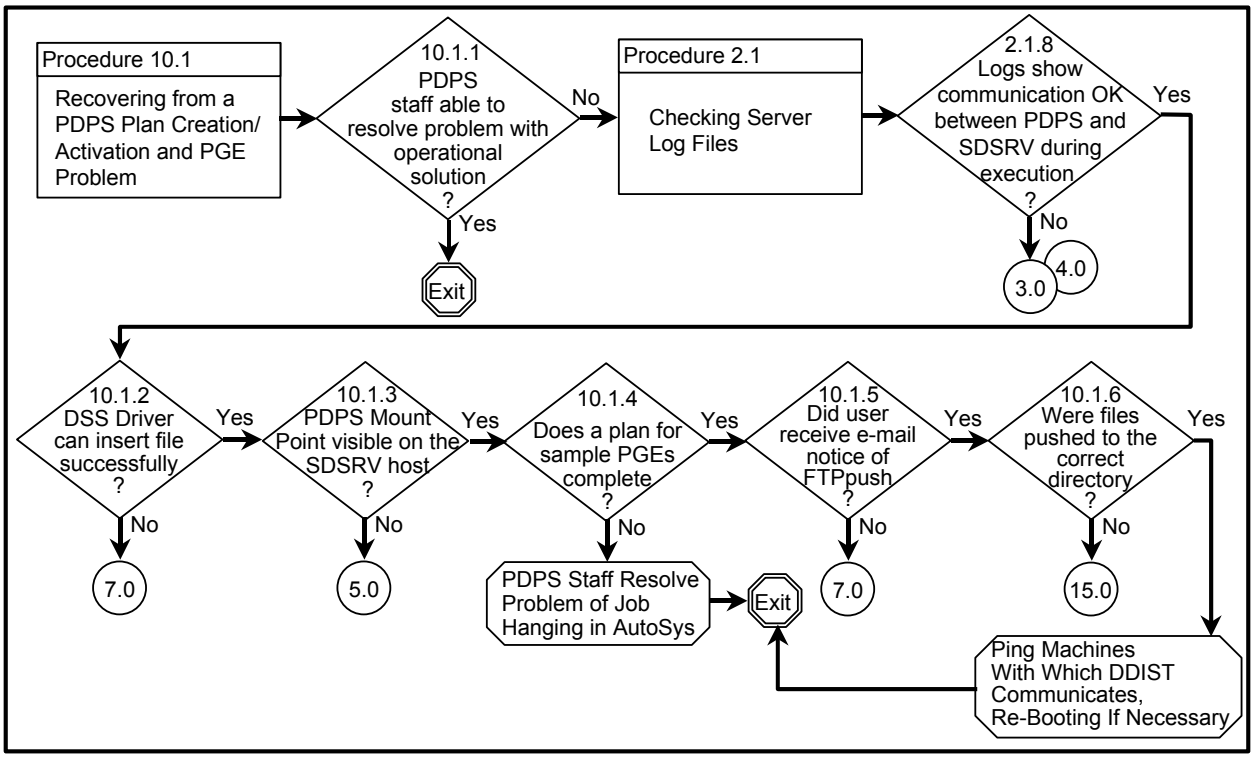

Figure 28. 10.0: Planning and Data Processing Problems

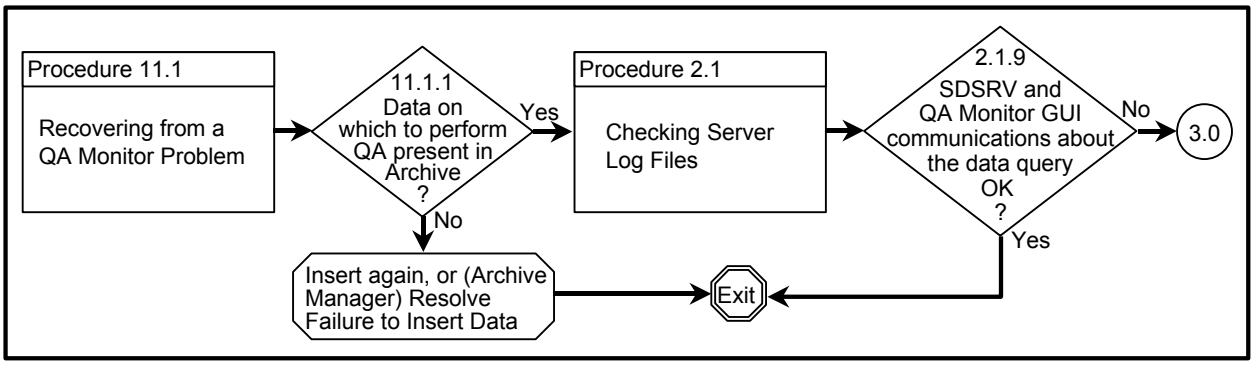

Figure 29. 11.0: Quality Assessment Problems

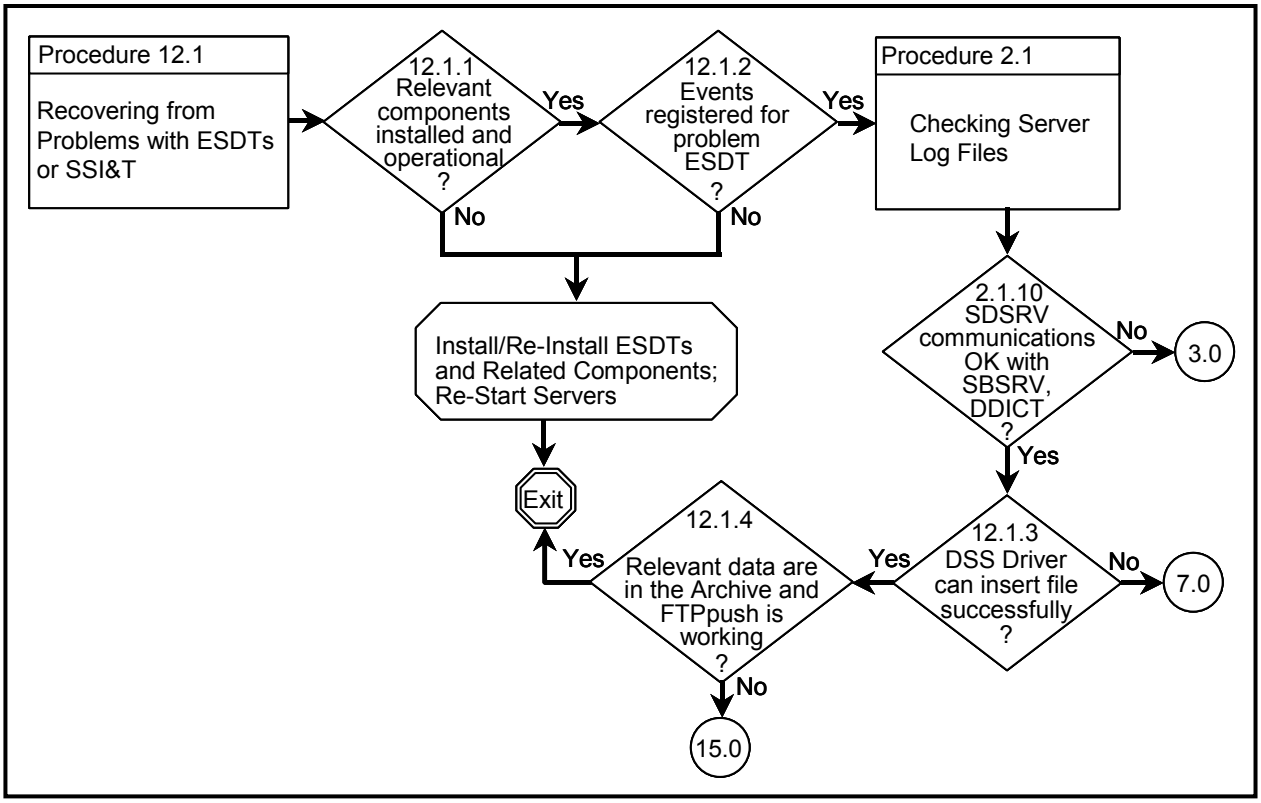

Figure 30. 12.0: Problems with ESDTs and SSI&T

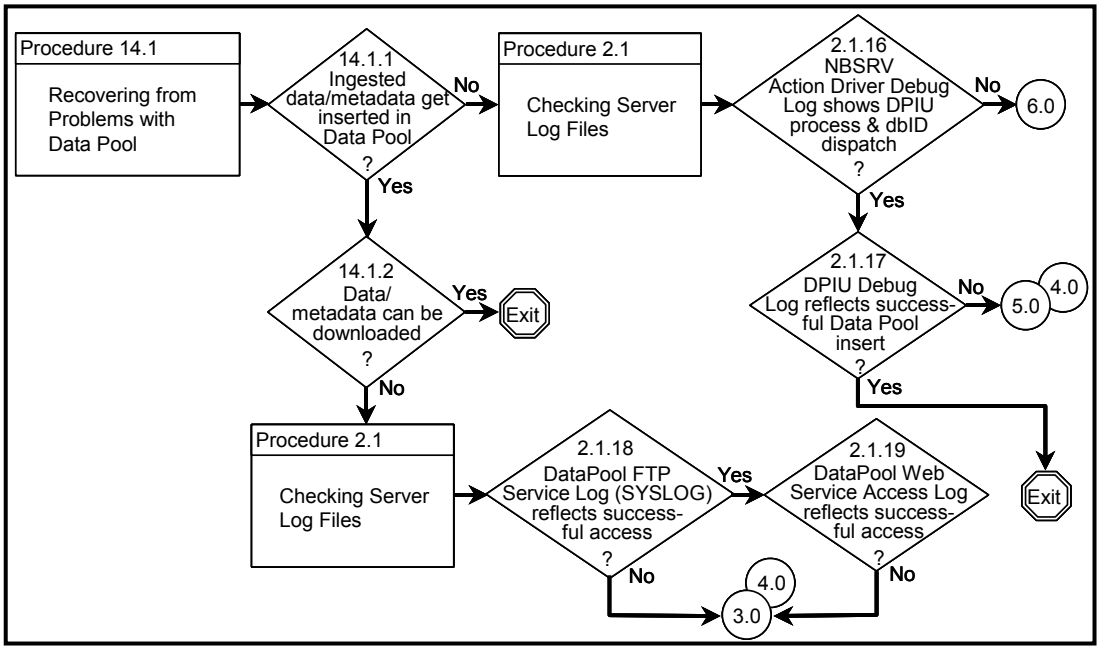

Figure 31. 13.0: Problems with Data Search and Order

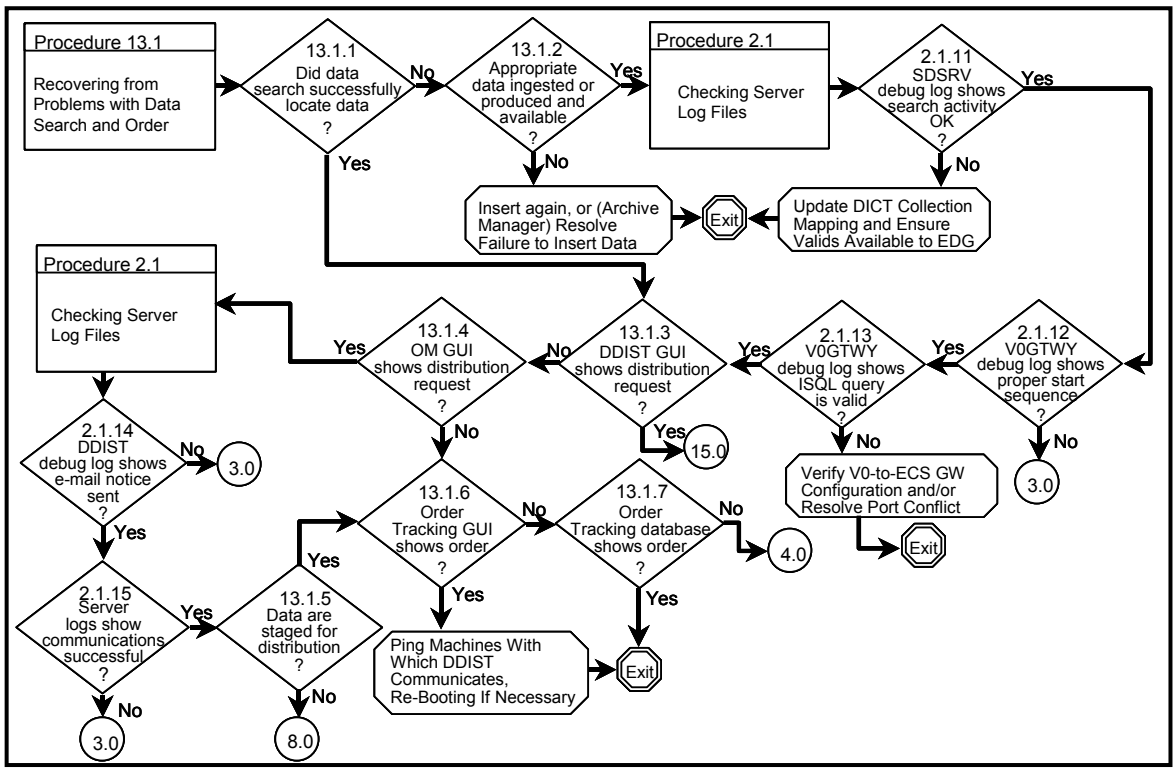

Figure 32. 14.0: Problems with Data Pool

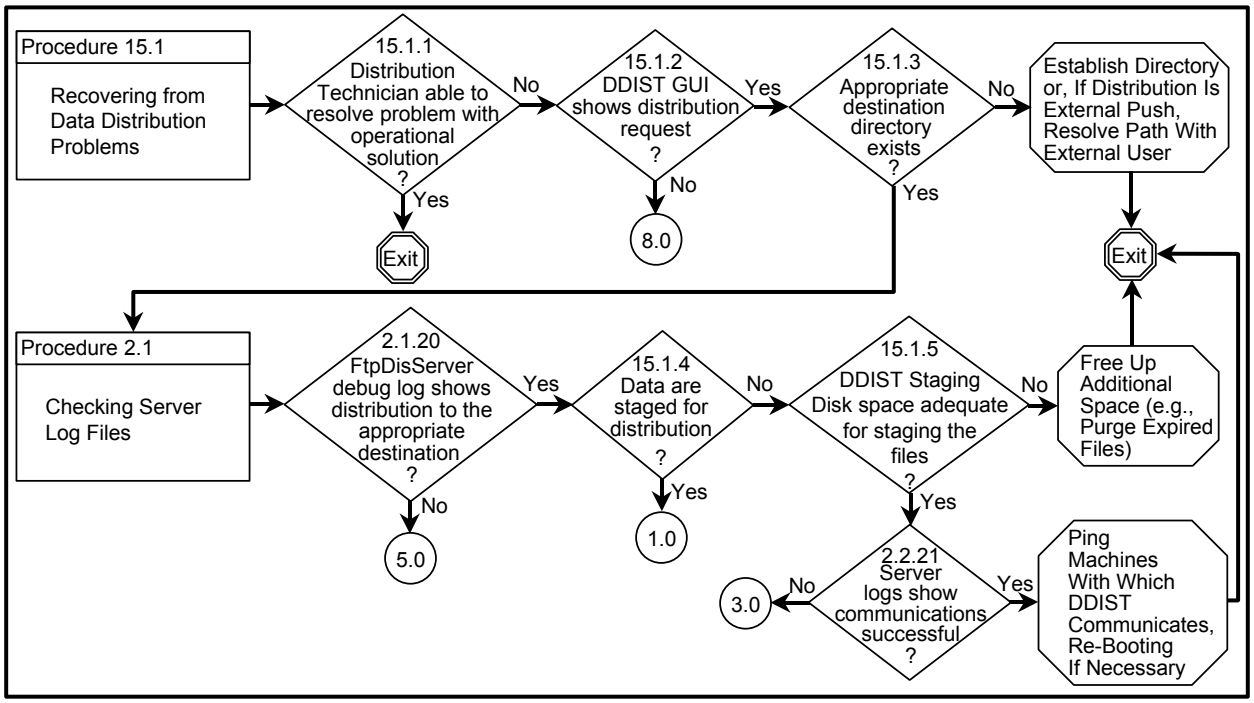

Figure 33. 15.0: Data Distribution Problems

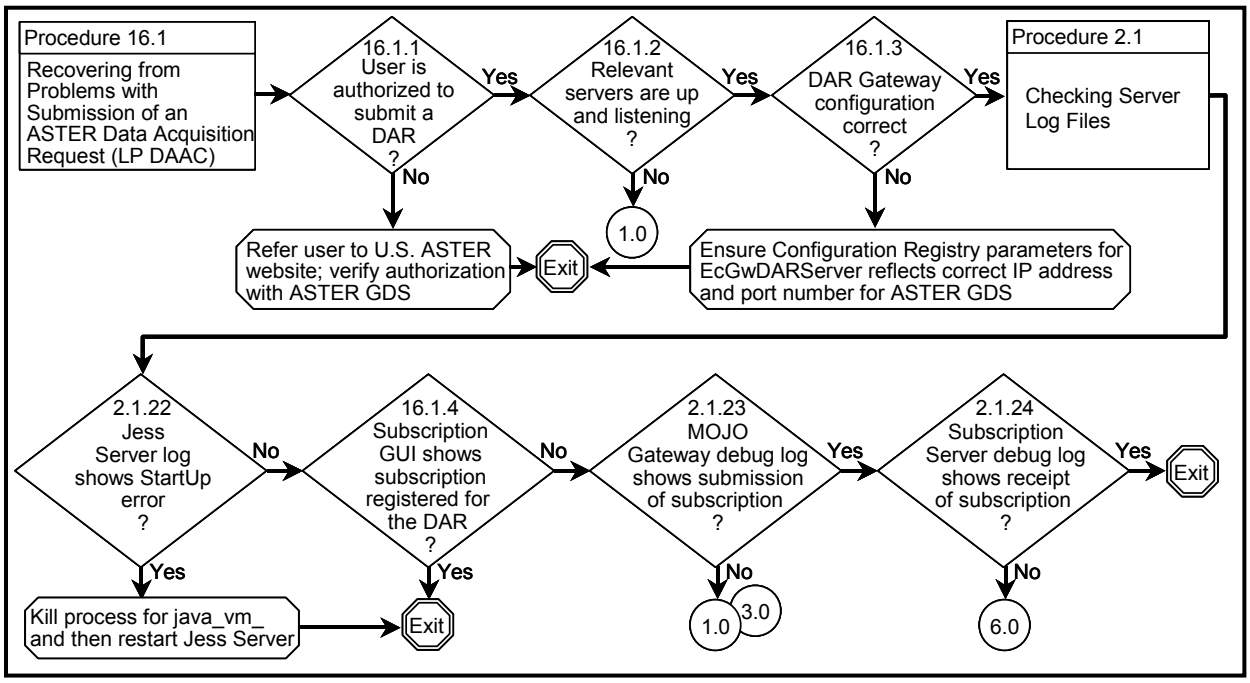

Figure 34. 16.0: Problems with Data Acquisition Requests (LP DAAC Only)

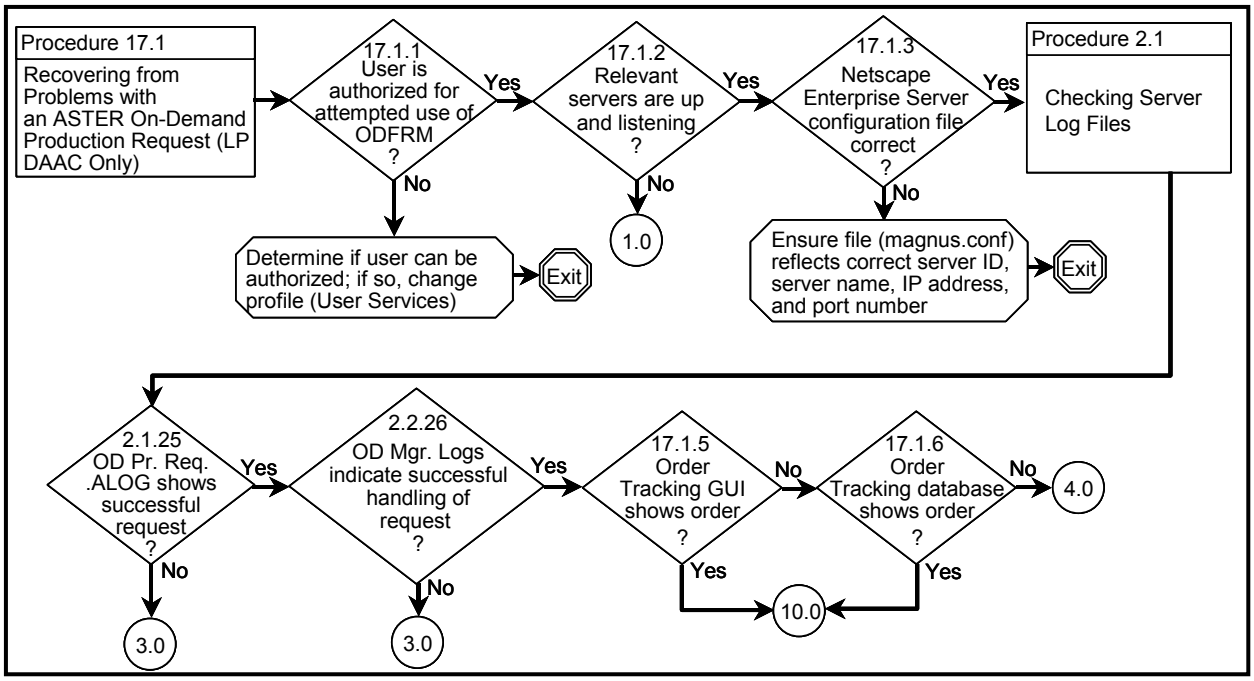

Figure 35. 17.0: Problems with On-Demand Production Requests (LP DAAC Only)

Using WhatsUp Gold, Whazzup, ECS Monitor, and EcCsIdPingServers Script to Check the Status of Hosts and Servers

As noted in a previous section of this lesson, WhatsUp Gold and Whazzup provide the primary means for a quick check on the status of system hosts and servers. Displays in these programs provide access to system information that may help diagnose problems. The ECS Monitor also provides server status, and an associated script enables the operator to ping servers. A basic first step in troubleshooting is typically to run a quick check to ensure that the necessary servers are up and listening. Use the following procedure.

Check the Status of Hosts and Servers (Procedure 1.1)

1 Log in to the host for WhatsUp Gold and check the status of system hosts, noting especially and running a Quick Status check on the host for any suspect server by executing the procedure for obtaining the status on a node (see procedure described earlier in this lesson).

- The WhatsUp Gold **Quick Status** display should indicate that the host is active and responding, and any services on the host should be identified with green background to indicate that they are up.
- If the host is down and/or necessary services are unavailable, it may be necessary to troubleshoot and resolve a problem with the hardware and then restart the host to bring it back on line.

2 If the host checks out OK, log in to workstation ***x*0ins02** and use the Netscape browser and Whazzup to determine if any servers of interest are down (see detailed procedure in a previous section of this lesson).

- NOTE: The ***x*** in the workstation name will be a letter designating your site: **g** = GSFC, **m** = SMC, **l** = LaRC, **e** = LP DAAC, **n** = NSIDC, **o** = ORNL, **a** = ASF, **j** = JPL (e.g., **l0ins02** indicates an interface host workstation at LaRC).
- **EcMsWz-Whazzup???** should indicate that the servers are up. If Whazzup indicates that a required server is down, go to Step 4; otherwise continue with Step 3.

3 Run the **EcCsIdPingServers** script (see procedure **Using EcCsIdPingServers to determine server status** described in a previous section of this lesson).

- The script output lists connections made to servers and clients.

4 If Whazzup indicates that a required server is down, or if **EcCsIdPingServers** indicates no connection to a required server, restart the server as follows:

a. Log in to the host for the server that is down.

b. To change to the directory containing start scripts and other utilities, type **cd /usr/ecs/<*MODE*>/CUSTOM/utilities** and then press the **Return/Enter** key.

– The working directory is changed to **/usr/ecs/<*MODE*>/CUSTOM/utilities**. and a UNIX prompt is returned.

c. Type **ls –al** and then press the **Return/Enter** key.

– A list of the start scripts and other files in the directory is displayed and a UNIX prompt is returned.

d. Use the mouse and its left (or preferred) mouse button to highlight the name of the start script for the server that is down.

– The name of the start script is highlighted.

e. Press and release the middle mouse button.

– The name of the highlighted start script is pasted at the UNIX prompt.

f. Type a space and the mode in which the server is to be started (the mode selected in step 4b), to complete the specification of the start command in the format ***<serverstartscript> <MODE>***, and then press the **Return/Enter** key.

– The script executes to start the server.

5 To check that the server started, repeat step 2.

- If the server did not start, continue with the procedure **Checking Server Log Files (Procedure 2.1)**.

Checking Server Log Files

The functioning of the system requires communication among servers in a distributed information system. Therefore, if system performance degradations occur, initial things to look for include connectivity problems. Some of these may be reflected in the log files (e.g., error messages at server start up). Log files can often provide information that will identify possible sources of disruption in server function (including a server failing to start) or communications, suggesting additional checks or actions that may help resolve the problem. It may be necessary to examine logs both on the server being called and on the server from which the call is made. If there is no evidence of these or other types of problems in the server log and the problem is unresolved (e.g., the server still cannot be started), it will be necessary to prepare a Trouble Ticket and refer the problem to the Help Desk/Sustaining Engineering.

Servers typically generate an application log and a debug log. There may also be other logs helpful in troubleshooting (e.g., driver logs, data processing .err logs, script logs). The procedure for checking a log file starts with the assumption that the operator is logged in to the system.

Checking Server Log Files (Procedure 2.1)

1 Log in to the host for the server and log(s) to be examined.

2 Type **cd /usr/ecs/<*MODE*>/CUSTOM/logs** and then press the **Return/Enter** key.

- The prompt reflects the change to directory **/usr/ecs/<*MODE*>/CUSTOM/logs**.

3 To view a server log, type **pg *filename*** and then press the **Return/Enter** key.

- ***filename*** refers to the log file to be reviewed (e.g., **EcDsScienceDataServer.ALOG**, **EcDsScienceDataServerDebug.log**).
- The first page of the log file is displayed; additional sequential pages can be displayed by pressing the **Return/Enter** key at the **:** prompt.
- Although this procedure has been written for the **pg** command, any UNIX editor or visualizing command (e.g., **vi**, **more**, **tail**) can be used to review the log file.
- Typically, the **<*server*>Debug.log** captures more detailed information than the **<*server*>.ALOG**. However, for some servers (e.g., **SDSRV**), there may be significant detail in the **<*server*>.ALOG**. It is also important to note that the **DebugLevel** parameter setting in the **Configuration Registry** determines the level of detail captured in the **<*server*>Debug.log** (**0** is off, a setting of **1** captures status and errors, a setting of **2** captures major events, and a setting of **3** is a full trace recording of all activity). If the **DebugLevel** has been set to one of the lower levels during operations, the System Administrator may set it to **3** during troubleshooting.

Similarly, the **AppLogLevel** parameter setting determines the level of detail captured in the ***<server>*.ALOG** (0 provides a full trace recording of all events, 1 provides messages related to all major events, 2 yields just records of errors, and 3 turns recording off). (Note: There are other debug levels available for some logs; Storage Management (STMGT) offers "enhanced" debugging based on bitmasks. Level 7 provides a four-bit level for detailed database debugging. Level 15 provides an eight-bit level that repeatedly dumps the in-memory request queue in the STMGT Request Manager.

4 Review the log file(s) to determine if there are any indications of connection problems or errors at start up.

- The log file for the called server may contain an error message indicating a problem at start-up. The debug log should indicate a typical start sequence, including (sample log entries in the following material were taken from a debug log showing start-up for EcDsStFtpServer):
  - Get parameters from registry (log entries similar to the following).

```
DSS EcDsStFtpServer Server Debug  log on f2acg01 starting at Mon Jun  4 07:57:45
    EDT 2001

EcAgInstanceID Sequence Number is 3870

Setting up environment variables needed for DCE:

RPC_UNSUPPORTED_NETIFS = ""

/usr/ecs/DEV07/CUSTOM/bin/DSS/EcDsStFtpServer ConfigFile
    /usr/ecs/DEV07/CUSTOM/cfg/EcDsStFtpServer.CFG ecs_mode DEV07
    StartTemperature cold

Started process EcDsStFtpServer in mode DEV07 with PID 2709893

EcRgRegistry_1_0::ctor this = 0x104eef38

EcRgRegistry_1_0::ctor this = 0x104eef88

FoIpPtToPtPortalImp::Send sent 20/20

FoIpPtToPtPortalImp::Send sent 219/219

FoIpPtToPtPortalImp::Receive got 20

FoIpPtToPtPortalImp::Receive got 1024

FoIpPtToPtPortalImp::Receive got 246

******* After Retrieving of RGY: Name = EcDsStFtpServerNONE

ProgramID = 4645102

ApplicationID = 4600000
```

Release = B

DeltaTime = 0

Site = RBD

SubSysName = DSS

MajorVersion = 1

MinorVersion = 0

DebugLevel = 3

AppLogLevel = 0

AppLogSize = 3000000

DBServer = f2acg01_srvr

DBLoginName = EcDsStFtpServer

DBName = stmgtdb1

– Load resource catalogs (log entries indicate the loading, or that the loading did not complete, similar to the following).

06/04/01 07:57:47: Thread ID : 65536 : loading resource catalog file from /usr/ecs/DEV07/CUSTOM/data/DSS/ResourceCatalogs/DsMdResource.dat.rcat

06/04/01 07:57:48: Thread ID : 65536 : loading resource catalog file from /usr/ecs/DEV07/CUSTOM/data/DSS/ResourceCatalogs/EcDsSdHr.dat.rcat

06/04/01 07:57:48: Thread ID : 65536 : loading resource catalog file from /usr/ecs/DEV07/CUSTOM/data/DSS/ResourceCatalogs/DsSrResource.dat.rcat

06/04/01 07:57:48: Thread ID : 65536 : loading resource catalog file from /usr/ecs/DEV07/CUSTOM/data/DSS/ResourceCatalogs/DsGlResource.dat.rcat

06/04/01 07:57:48: Thread ID : 65536 : loading resource catalog file from /usr/ecs/DEV07/CUSTOM/data/DSS/ResourceCatalogs/DsShResource.dat.rcat

06/04/01 07:57:48: Thread ID : 65536 : loading resource catalog file from /usr/ecs/DEV07/CUSTOM/data/DSS/ResourceCatalogs/EcDsSdHc.dat.rcat

– Pre-cache errors associated with database connectivity (log entries similar to the following).

06/04/01 07:57:48: Thread ID : 65536 : User Name : EcDsStFtpServer | Thread 65536

06/04/01 07:57:48: Thread ID : 65536 : Database Name : stmgtdb1_DEV07 | Thread 65536

06/04/01 07:57:49: Thread ID : 65536 : Server Name : f2acg01_srvr | Thread 65536

06/04/01 07:57:49: Thread ID : 65536 : DsShTSStorage: creating the MutexVec for this thread

06/04/01 07:57:49: Thread ID : 65536 : SEARCHING FOR: 30141 (Not found) | Thread 65536

06/04/01 07:57:49: Thread ID : 65536 : CACHING: DsEStUnknownError (30141) | Thread 65536

06/04/01 07:57:49: Thread ID : 65536 : SEARCHING FOR: 30143 (Not found) | Thread 65536

06/04/01 07:57:49: Thread ID : 65536 : CACHING: DsEStUnknownError (30143) | Thread 65536

06/04/01 07:57:49: Thread ID : 65536 : SEARCHING FOR: 30139 (Not found) | Thread 65536

06/04/01 07:57:49: Thread ID : 65536 : CACHING: DsEStUnknownError (30139) | Thread 65536

06/04/01 07:57:49: Thread ID : 65536 : SEARCHING FOR: 30142 (Not found) | Thread 65536

06/04/01 07:57:49: Thread ID : 65536 : CACHING: DsEStUnknownError (30142) | Thread 65536

06/04/01 07:57:49: Thread ID : 65536 : SEARCHING FOR: 30148 (Not found) | Thread 65536

06/04/01 07:57:49: Thread ID : 65536 : CACHING: DsEStUnknownError (30148) | Thread 65536

06/04/01 07:57:49: Thread ID : 65536 : SEARCHING FOR: 30144 (Not found) | Thread 65536

06/04/01 07:57:49: Thread ID : 65536 : CACHING: DsEStUnknownError (30144) | Thread 65536

06/04/01 07:57:49: Thread ID : 65536 : SEARCHING FOR: 30145 (Not found) | Thread 65536

06/04/01 07:57:49: Thread ID : 65536 : CACHING: DsEStUnknownError (30145) | Thread 65536

06/04/01 07:57:49: Thread ID : 65536 : SEARCHING FOR: 30147 (Not found) | Thread 65536

06/04/01 07:57:49: Thread ID : 65536 : CACHING: DsEStUnknownError (30147) | Thread 65536

06/04/01 07:57:49: Thread ID : 65536 : SEARCHING FOR: 30146 (Not found) | Thread 65536

06/04/01 07:57:49: Thread ID : 65536 : CACHING: DsEStUnknownError (30146) | Thread 65536

06/04/01 07:57:49: Thread ID : 65536 : SEARCHING FOR: 30211 (Not found) | Thread 65536

06/04/01 07:57:49: Thread ID : 65536 : CACHING: DsEStUnknownError (30211) | Thread 65536

06/04/01 07:57:49: Thread ID : 65536 : SEARCHING FOR: 30140 (Not found) | Thread 65536

06/04/01 07:57:49: Thread ID : 65536 : CACHING: DsEStUnknownError (30140) | Thread 65536

– Get server configuration parameters from the database (log entries similar to the following).

06/04/01 07:57:49: Thread ID : 65536 : BaseReal::Ctor: Server Name is - EcDsStFtpServerNONE | Thread 65536

06/04/01 07:57:50: Thread ID : 65536 : User Name : EcDsStFtpServer | Thread 65536

06/04/01 07:57:50: Thread ID : 65536 : Database Name : stmgtdb1_DEV07 | Thread 65536

06/04/01 07:57:50: Thread ID : 65536 : Server Name : f2acg01_srvr | Thread 65536

06/04/01 07:57:50: Thread ID : 65536 : myTransactionList[0]: use stmgtdb1_DEV07 | Thread 65536

06/04/01 07:57:50: Thread ID : 65536 : DBIF:Execute: Ultimate SQL: use stmgtdb1_DEV07 | Thread 65536

06/04/01 07:57:50: Thread ID : 65536 : myTransactionList[1]: exec DsStCPSelectByName "EcDsStFtpServerNONE" | Thread 65536

06/04/01 07:57:50: Thread ID : 65536 : DBIF:Execute: Ultimate SQL: exec DsStCPSelectByName "EcDsStFtpServerNONE" | Thread 65536

06/04/01 07:57:50: Thread ID : 65536 : DBIF:Fetched:[8.000000][EcDsStFtpServerNONE][1][10][FTP][][0][FTPA][NONE][4194304] | Thread 65536

– Spawn receptionist thread and register server in the database (log entries similar to the following).

06/04/01 07:57:50: Thread ID : 65536 : DsStReceptionist:BindSocketGetInfo: Port assigned is 13441 | Thread 65536

06/04/01 07:57:50: Thread ID : 65536 : myTransactionList[0]: use stmgtdb1_DEV07 | Thread 65536

06/04/01 07:57:50: Thread ID : 65536 : DBIF:Execute: Ultimate SQL: use stmgtdb1_DEV07 | Thread 65536

06/04/01 07:57:50: Thread ID : 65536 : myTransactionList[1]: exec DsStCPRegisterServer 8, 13441, "f2acg01" | Thread 65536

06/04/01 07:57:50: Thread ID : 65536 : DBIF:Execute: Ultimate SQL: exec DsStCPRegisterServer 8, 13441, "f2acg01" | Thread 65536

06/04/01 07:57:50: Thread ID : 65536 : Ftp:Ctor: EcDsStFtpServerNONE | Thread 65536

06/04/01 07:57:50: Thread ID : 65536 : myTransactionList[0]: use stmgtdb1_DEV07 | Thread 65536

06/04/01 07:57:50: Thread ID : 65536 : DBIF:Execute: Ultimate SQL: use stmgtdb1_DEV07 | Thread 65536

06/04/01 07:57:50: Thread ID : 65536 : myTransactionList[1]: exec DsStCPSelectById 8 | Thread 65536

06/04/01 07:57:50: Thread ID : 65536 : DBIF:Execute: Ultimate SQL: exec DsStCPSelectById 8 | Thread 65536

06/04/01 07:57:50: Thread ID : 65536 : DBIF:Fetched:[8.000000][EcDsStFtpServerNONE][1][10][FTP][f2acg01][13441][FTPA][NONE][4194304] | Thread 65536

06/04/01 07:57:50: Thread ID : 65536 : Ftp:Ctor: Leaving | Thread 65536

– Spawn service threads (log entries similar to the following).

06/04/01 07:57:50: Thread ID : 65536 : Ftp:Startup: temperature = cold | Thread 65536

06/04/01 07:57:50: Performing startup processing | Thread 65536

06/04/01 07:57:50: Thread ID : 65536 : Spawning service threads | Thread 65536

06/04/01 07:57:50: Thread ID : 65536 : BR:GetThreadPoolConfiguration | Thread 65536

06/04/01 07:57:51: Thread ID : 65536 : myTransactionList[0]: use stmgtdb1_DEV07 | Thread 65536

06/04/01 07:57:51: Thread ID : 65536 : DBIF:Execute: Ultimate SQL: use stmgtdb1_DEV07 | Thread 65536

06/04/01 07:57:51: Thread ID : 65536 : myTransactionList[1]: exec DsStSTCSelectForServer 8, "ThreadPool" | Thread 65536

06/04/01 07:57:51: Thread ID : 65536 : DBIF:Execute: Ultimate SQL: exec DsStSTCSelectForServer 8, "ThreadPool" | Thread 65536

06/04/01 07:57:51: Thread ID : 65536 : DBIF:Fetched:[ThreadPool][10][0][0][0][0][10] | Thread 65536

06/04/01 07:57:51: Thread ID : 65536 : 3_2709893_0757-1125858625_155062001_f2acg01:FTPA: BR:GetThreadPoolConfiguration Return

ing | Thread 65536

06/04/01 07:57:51: Thread ID : 65536 : Ftp: Spawning a service thread | Thread 65536

06/04/01 07:57:51: Starting a new service thread | Thread 65536

06/04/01 07:57:51: Thread ID : 65536 : Ftp: Spawning a service thread | Thread 65536

06/04/01 07:57:51: 06/04/01 07:57:51: Thread ID : 65554 : Waiting for work | Thread 65554

06/04/01 07:57:51: Thread ID : 65554 : DsShTSStorage: creating the MutexVec for this thread

06/04/01 07:57:51: Thread ID : 65554 : Waking up manager thread | Thread 65554

.

.

.

06/04/01 07:57:51: Starting a new service thread | Thread 65536

06/04/01 07:57:51: Thread ID : 65536 : Ftp: Spawning a service thread | Thread 65536

06/04/01 07:57:51: Starting a new service thread | Thread 65536

06/04/01 07:57:51: Thread ID : 65559 : Waiting for work | Thread 65559

06/04/01 07:57:51: Thread ID : 65560 : Waiting for work | Thread 65560

06/04/01 07:57:51: Thread ID : 65561 : Waiting for work | Thread 65561

– Process Restart Notification for server restart ("Ready to accept requests") (log entries similar to the following).

06/04/01 07:57:51: Thread ID : 65536 : myTransactionList[0]: use stmgtdb1_DEV07 | Thread 65536

06/04/01 07:57:51: Thread ID : 65536 : DBIF:Execute: Ultimate SQL: use stmgtdb1_DEV07 | Thread 65536

06/04/01 07:57:51: Thread ID : 65536 : myTransactionList[1]: BEGIN TRANSACTION OUTER_278888352 | Thread 65536

06/04/01 07:57:51: Thread ID : 65536 : DBIF:Execute: Ultimate SQL: BEGIN TRANSACTION OUTER_278888352 | Thread 65536

06/04/01 07:57:51: Thread ID : 65536 : myTransactionList[2]: exec DsStGRRestartNotification "10_2709893_0757-1125858625_15506

2001_f2acg01:FTPA:Server restart", "EcDsStFtpServerNONE", "cold" | Thread 65536

06/04/01 07:57:51: Thread ID : 65536 : DBIF:Execute: Ultimate SQL: exec DsStGRRestartNotification "10_2709893_0757-1125858625

_155062001_f2acg01:FTPA:Server restart", "EcDsStFtpServerNONE", "cold" | Thread 65536

06/04/01 07:57:52: Thread ID : 65536 : DBIF:Fetched:[] | Thread 65536

06/04/01 07:57:52: Thread ID : 65536 : DBIF:Fetched:[8.000000] | Thread 65536

06/04/01 07:57:52: Thread ID : 65536 : DBIF:Execute: Ultimate SQL: COMMIT TRANSACTION OUTER_278888352 | Thread 65536

06/04/01 07:57:52: Thread ID : 0 : No servers to awaken -- get status | Thread 0

06/04/01 07:57:52: Thread ID : 65536 : Spawning manager thread | Thread 65536

06/04/01 07:57:52: Ready to accept requests | Thread 65564

– Check queue for requests ("Waiting for an event" means there is nothing else in the queue.) (log entries similar to the following).

06/04/01 07:57:52: Thread ID : 65564 : BR:ProcessCancelledRequests | Thread 65564

06/04/01 07:57:52: Thread ID : 65564 : DsShTSStorage: creating the MutexVec for this thread

06/04/01 07:57:52: Thread ID : 65564 : myTransactionList[0]: use stmgtdb1_DEV07 | Thread 65564

06/04/01 07:57:52: Thread ID : 65564 : DBIF:Execute: Ultimate SQL: use stmgtdb1_DEV07 | Thread 65564

06/04/01 07:57:52: Thread ID : 65564 : myTransactionList[1]: exec DsStGRSelectCancelled 8 | Thread 65564

06/04/01 07:57:52: Thread ID : 65564 : DBIF:Execute: Ultimate SQL: exec DsStGRSelectCancelled 8 | Thread 65564

06/04/01 07:57:52: Thread ID : 65564 : BR:ProcessCancelledRequests: Nothing cancelled | Thread 65564

06/04/01 07:57:52: Thread ID : 65564 : BR:ProcessCancelledRequests Returning | Thread 65564

06/04/01 07:57:52: Thread ID : 65564 : Ftp: Getting next request | Thread 65564

06/04/01 07:57:52: Thread ID : 65564 : myTransactionList[0]: use stmgtdb1_DEV07 | Thread 65564

06/04/01 07:57:52: Thread ID : 65564 : DBIF:Execute: Ultimate SQL: use stmgtdb1_DEV07 | Thread 65564

06/04/01 07:57:52: Thread ID : 65564 : myTransactionList[1]: exec DsStFRGetNextRequest 8 | Thread 65564

06/04/01 07:57:52: Thread ID : 65564 : DBIF:Execute: Ultimate SQL: exec DsStFRGetNextRequest 8 | Thread 65564

06/04/01 07:57:52: Thread ID : 65564 : GetNextRequest: No requests available | Thread 65564

06/04/01 07:57:52: Thread ID : 65564 : Waiting for an event | Thread 65564

- The log file for the server from which the call originated may indicate a problem completing a connection. The log should indicate successful awakening of a remote host, with entries similar to the following:

  06/04/01 07:57:52: Thread ID : 65536 : DsStPatron:AwakenRemoteServer: Hostname - f2acg01 | Thread 65536

  06/04/01 07:57:52: Thread ID : 65536 : DsStPatron:AwakenRemoteServer: Port Number - 13441 | Thread 65536

  06/04/01 07:57:52: Thread ID : 65536 : Patron: Creating new entry for EcDsStFtpServerNONE | Thread 65536

  06/04/01 07:57:52: Thread ID : 65536 : Trying gethostbyname_r() 0 of 5 attempts | Thread 65536

  06/04/01 07:57:52: Thread ID : 65536 : Waking up EcDsStFtpServerNONE | Thread 65536

  and should indicate completion of a connection to the called server, with entries similar to the following:

  06/04/01 07:57:52: Thread ID : 65553 : DsStReceptionist:WaitForConnections: A connection has been accepted | Thread 65553

  06/04/01 07:57:52: Thread ID : 65564 : BR:ProcessCancelledRequests | Thread 65564

  06/04/01 07:57:52:

  06/04/01 07:57:52: Thread ID : 65553 : Waking up manager thread | Thread 65553

  06/04/01 07:57:52: Thread ID : 65564 : : 06/04/01 07:57:52: read ID : 7:57:52: DsShTSStorageDsShTSStorage: creating the MutexVec for this thread: creating the MutexVec for this thread665553: 53 : DsShTSStorage: creating the MutexVec for this thread

  06/04/01 07:57:52: Thread ID : 65564 : myTransactionList[0]: use stmgtdb1_DEV07 | Thread 65564

  06/04/01 07:57:52: Thread ID : 65564 : DBIF:Execute: Ultimate SQL: use stmgtdb1_DEV07 | Thread 65564

  06/04/01 07:57:52: Thread ID : 65564 : myTransactionList[1]: exec DsStGRSelectCancelled 8 | Thread 65564

06/04/01 07:57:52: Thread ID : 65564 : DBIF:Execute: Ultimate SQL: exec DsStGRSelectCancelled 8 | Thread 65564

06/04/01 07:57:52: Thread ID : 65564 : BR:ProcessCancelledRequests: Nothing cancelled | Thread 65564

06/04/01 07:57:52: Thread ID : 65564 : BR:ProcessCancelledRequests Returning | Thread 65564.

- This procedure is applicable for reviewing logs for different types of errors and events on system servers.

5 Exit the log file (e.g., from **pg**, type **q** and then press the **Return/Enter** key).

6 If one or more log files indicate connection problems or start-up errors, continue with the procedure for **Recovering from a Connectivity Problem (Procedure 3.1)**.

- An error may result in log entries similar to the following:

06/04/01 07:57:52: Thread ID : 65536 : SEARCHING FOR: 30148 (Found) | Thread 65536

06/04/01 07:57:52: Thread ID : 65536 : DsStCPSelectById: ServerId [0] does not exist. (32017) | Thread 65536

06/04/01 07:57:52: Thread ID : 65536 : Unknown error | Thread 65536

06/04/01 07:57:52: Thread ID : 65536 : SEARCHING FOR: 30148 (Found) | Thread 65536

06/04/01 07:57:52: Thread ID : 65536 : DsStCPSelectById: ServerId [0] does not exist. (32017) | Thread 65536

06/04/01 07:57:52: Thread ID : 65536 : Unknown error | Thread 65536

06/04/01 07:57:52: Thread ID : 65536 : SEARCHING FOR: 30148 (Found) | Thread 65536

06/04/01 07:57:52: Thread ID : 65536 : SEARCHING FOR: 30148 (Found) | Thread 65536

06/04/01 07:57:52: Thread ID : 65536 : DsStStoredProcedures::Execute - ERROR: Could not execute stored procedure | Thread 65536

06/04/01 07:57:52: Thread ID : 65536 : Unknown error | Thread 65536

06/04/01 07:57:52: Thread ID : 65536 : SEARCHING FOR: 30148 (Found) | Thread 65536

06/04/01 07:57:52: Thread ID : 65536 : SEARCHING FOR: 30148 (Found) | Thread 65536

06/04/01 07:57:52: Thread ID : 65536 : DsStPatron: Lookup SP failed | Thread 65536

06/04/01 07:57:52: Thread ID : 65536 : Unknown error | Thread 65536

06/04/01 07:57:52: Thread ID : 65536 : WARNING: Unable to ping 0 | Thread 65536

A Special Case: Checking the Request Manager Server Debug Log

The Request Manager server in the Storage Management computer software configuration item of the Data Server Subsystem processes requests from external clients (processes outside of Storage Management). Requests between Storage Management servers are passed directly from one server to another.

- Requests that require one of the Storage Management servers to perform processing are checkpointed (except requests that can be serviced solely through SQL).
  - Checkpointing involves recording the request's state (e.g., "checkpointed," "failed," "completed") in the database to assist in error recovery.
- Requests that can be serviced solely through SQL are considered "trivial" requests.
  - Trivial requests are not checkpointed.
  - Examples include attaching to a staging disk, getting capacity, and getting block size.
  - Trivial requests submitted from outside Storage Management are serviced by the Request Manager server.
  - Trivial requests originating within Storage Management are passed directly from the client to the database server.

The Request Manager server (like other Storage Management servers) can manage several concurrent activities. This is accomplished through the use of threads. There are several different kinds of threads:

- Manager thread.
  - One per Storage Management server.
  - Responsible for dequeuing requests and assigning them to service threads.
  - Checks for cancelled requests.
- Service thread.
  - Multiple threads per Storage Management server.
  - Responsible for the actual servicing of requests.
  - Logs all progress including all changes of request state.
  - Notifies submitter when request has been completed.
- Receptionist thread.
  - One per Storage Management server.
  - Registers the server as "up" in the database.

  - Sits on a socket, waiting for connections from other Storage Management servers.
  - Unregisters the server at shutdown.
- Inbound RPC thread.
  - Spawned by a request from a Storage Management client.
  - Hands off the request to the manager thread and waits for completion of the request.
- Housekeeper thread.
  - Watches for completed requests that haven't previously been seen and processed.

Information concerning Request Manager server processing of requests (identified by thread) is recorded in the Request Manager server debug log (assuming some level of debug log recording is specified in the Registry database).

Trivial requests typically involve the following types of activities:

- Inbound RPC thread appears with a request.
- Manager thread dequeues the request and assigns it to a service thread.
- Service thread recognizes the thread as "trivial."
  - A "No checkpointing required -- going straight to responded" message is recorded in the Request Manager server debug log.
- Service thread executes the database transaction for results.
  - When the request is completed, a "Done servicing" message is recorded in the Request Manager server debug log.
  - If the request fails, an "Unable to service" message is recorded in the Request Manager server debug log.
- Service thread hands the results to the inbound RPC thread.
  - A "Notifying the client" message is recorded in the Request Manager server debug log.
- Inbound RPC thread silently returns to the client with the results.

Non-trivial requests are forwarded to the appropriate Storage Management server (e.g., EcDsStFtpServer, EcDsStStagingDiskServer, EcDsStArchiveServer) for processing.

- Some of the same types of entries are made in the Request Manager server debug log for non-trivial requests as for trivial requests.
  - For example:
    - "Waking up service thread" (Request Manager is preparing to process the request).
    - "Done servicing" (request processing has been completed).
    - "Unable to service" (the request has failed).
- Although some trivial requests include "token" statements, tokens are characteristic of non-trivial requests.
  - A token includes request information that varies with the type of operation to be performed.
  - For example, a token for an ftp request might include the following types of data:
    - Stored procedure (e.g., DsStFRInsert) [other types of stored procedures include DsStSDRInsert and DsStGRMapLogicalArchiveId].
    - RPC ID (e.g., RPCId=1821_535_1109-1124464729_171062001_x0ins01.xdc.ecs.nasa.gov:SBSVSDSV1DSDD1DSDD4:).
    - Username.
    - Encrypted password.
    - Host.
    - Source path.
    - Destination path.
    - External request ID.
    - Server name (e.g., EcDsStFtpServerNONE) [other types of operations might involve the EcDsStStagingDiskServerDRP1 for example].
    - Type of operation (e.g., FtpPush) [other types of operations include ArRetrieve, SDAllocateDisk, SDLinkFile].
    - Submitter (e.g., DSDD) [other types of operations might involve SDSV].
    - Priority.
  - The server to which the request was sent is identified by name (ServerName).

- Transaction ID is embedded in the RPC ID (the portion before the first colon in the RPC ID).

A "transaction" may involve multiple operations on a host or several hosts. Consequently, multiple threads may be used on each relevant host.

The procedure for checking the Request Manager server debug log files starts with the assumption that the operator has logged in to the system.

Checking the Request Manager Server Debug Log (Procedure 2.2)

1 Log in to the Distribution Server host (e.g., e0dis02, g0dis02, l0dis02, n0dis02) as described in Steps 1 through 5 of the procedure for **Launching the Data Distribution Operator and Storage Management Control GUIs** (previous section of this lesson).

2 Type **cd /usr/ecs/*MODE*/CUSTOM/logs** then press **Return/Enter**.

3 Type **pg *filename*** then press **Return/Enter**.

- ***filename*** refers to the appropriate Request Manager debug log.
- For example:

  pg EcDsStRequestManagerServerDebug.log
- The content of the first page of the specified file is displayed.
- Although this procedure has been written for the **pg** command, any UNIX editor or visualizing command (e.g., **vi**, **view**, **more**) can be used to review the log file.

4 At the **:** prompt type **/*date time*** then press **Return/Enter**.

- ***date time*** refers to the approximate date and time of the problem.
  - For example:

    06/18/01 12:17:31
- The file is searched for the specified text.
  - If the specified text is in the log file, the following type of response is displayed.

```
...skipping forward
06/18/01 12:17:31:  Thread ID : 105 : DsShTSStorage: creating
the MutexVec for this thread
[…]
```

  - If the specified text is not in the log file, the following type of response is displayed.

```
Pattern not found:
```

- If the specified text is not in the log file, verify the following aspects of Steps 3 and 4:
  - Date and time were entered correctly (Step 4).
  - Proper file was opened (Step 3).

5 At the **:** prompt type **/Unable to service** then press **Return/Enter**.

- **pg** searches the file for the specified text.
  - If the specified text is in the log file, the following type of response is displayed.

```
...skipping forward
2:IngestRQ409GR1 Unable to service | Thread 52
[…]
```

  - If the specified text is not in the log file, the following type of response is displayed.

```
Pattern not found:
```

- If the specified text is in the file, go to Step 7.
- If the specified text is not in the file, go to Step 6.

6 Examine the contents of the log file to determine which thread is associated with the problem being investigated.

- The following **pg** commands (at the **:** prompt) are useful:
  - ***n*** then **Return/Enter** (go to Page *n*).
  - **Return/Enter** or **+1** then **Return/Enter** (go down to the next page).
  - **-1** then **Return/Enter** (go back to the preceding page).
  - **+*n*** then **Return/Enter** (go down *n* number of pages).
  - **-*n*** then **Return/Enter** (go back *n* number of pages).
  - **+*n*l** then **Return/Enter** (go down *n* number of lines).
  - **-*n*l** then **Return/Enter** (go back *n* number of lines).
  - **q** then **Return/Enter** (exit from **pg**).

7 At the **:** prompt type the appropriate text (depending on the direction of the desired search) then press **Return/Enter**:

8 To search back toward the beginning of the file, type **^Waking up service thread *n*^** and then press **Return/Enter**.

9 To search toward the end of the file, type **/Waking up service thread *n*** and then press **Return/Enter**.

- For example:

  ^Waking up service thread 52^

  – The file is searched back toward the beginning of the file for the specified text.

- If the specified text is in the log file, the following type of response is displayed.

```
...skipping backward
06/18/01 12:17:31:  Thread ID : 102 : Waking up service thread 52 |
Thread 102
[…]
```

- If the specified text is not in the log file, the following type of response is displayed.

```
Pattern not found:
```

- The entries "Waking up service thread *n*" and "Unable to service | Thread *n*" bracket the thread servicing in which an error occurred.

NOTE: Thread IDs are reused frequently. There are likely to be many processes with the same thread ID in any particular log file. It is important to follow the correct instance of the thread.

NOTE: It is likely that the Request Manager would try again to process a failed request. Subsequent request processing may use the same thread ID or a different thread ID. However, it would involve the same transaction ID.

- A "No checkpointing required -- going straight to responded" entry associated with the thread ID indicates that the request is "trivial."

10 At the **:** prompt type **/SEARCHING** then press **Return/Enter**.

- The file is searched for the specified text.

  – If the specified text is in the log file, the following type of response is displayed.

```
...skipping forward
06/18/01 12:17:31:  Thread ID : 52 : SEARCHING FOR: 30148
(Found) | Thread 52
06/18/01 12:17:31:  Thread ID : 52 : SEARCHING FOR: 30148
(Found) | Thread 52
06/18/01 12:17:31:  Thread ID : 52 :
DsStStoredProcedures::Execute - ERROR: Could not execute stored
procedure | Thread 52
06/18/01 12:17:31:  Thread ID : 52 : Error encountered in stored
procedure | Thread 52
06/18/01 12:17:31:  Thread ID : 52 : DBIF:Execute: Ultimate SQL:
ROLLBACK TRANSACTION OUTER_7077776 | Thread 52
```

```
06/18/01 12:17:32:  Thread ID : 52 : 1_4501810_1217-
1124633447_169062001_p0icg01.pvc.ecs.nasa.gov:IPOBIPOB1INRM1IGSA
15:IngestRQ409GR1 Done servicing | Thread 52
06/18/01 12:17:32:  Thread ID : 52 : 1_4501810_1217-
1124633447_169062001_p0icg01.pvc.ecs.nasa.gov:IPOBIPOB1INRM1IGSA
15:IngestRQ409GR1 Unable to service | Thread 52
06/18/01 12:17:32:  Thread ID : 52 : 1_4501810_1217-
1124633447_169062001_p0icg01.pvc.ecs.nasa.gov:IPOBIPOB1INRM1IGSA
15:IngestRQ409GR1 Marked as unassigned | Thread 52
06/18/01 12:17:32:  Thread ID : 52 : 1_4501810_1217-
1124633447_169062001_p0icg01.pvc.ecs.nasa.gov:IPOBIPOB1INRM1IGSA
15:IngestRQ409GR1 Notifying the client | Thread 52
06/18/01 12:17:32:  Thread ID : 52 : Waiting for work | Thread
52
06/18/01 12:17:32:  Thread ID : 52 : Waking up manager thread |
Thread 52
[…]
```

- In the preceding example the expression **SEARCHING** is associated with Thread ID 52.
- The context of the SEARCHING statement indicates the type and source of the problem; in this case there appears to be a problem executing a stored procedure.

– If the specified text is not in the log file, the following type of response is displayed.

```
Pattern not found:
```

11 If the expression **SEARCHING** is not associated with the specified thread in the lines displayed, repeat Step 8.

12 If necessary, at the **:** prompt type **-2l** [lower-case letter l] then press **Return/Enter**.

- **pg** simulates scrolling the screen backward two lines (or any other number of lines that is typed at the prompt).
  – The file is redisplayed to include the two lines that preceded the page previously displayed.
  – For example:

```
...skipping backward
06/18/01 12:17:31:  Thread ID : 52 : DBIF:Execute: Ultimate SQL:
exec DsStSDAttachDisk
"/usr/ecs/TS2/CUSTOM/pdps/x0spg01/data/DpPrRm/x0spg01_disk",
"SDSV", 0 | Thread 52
06/18/01 12:17:31:  Thread ID : 52 : SEARCHING FOR: 30148
(Found) | Thread 52
06/18/01 12:17:31:  Thread ID : 52 : SEARCHING FOR: 30148
(Found) | Thread 52
```

```
06/18/01 12:17:31:  Thread ID : 52 :
DsStStoredProcedures::Execute - ERROR: Could not execute stored
procedure | Thread 52
06/18/01 12:17:31:  Thread ID : 52 : Error encountered in stored
procedure | Thread 52
[…]
```

  - The additional lines preceding "SEARCHING FOR" in the example indicate that the stored procedure in which the error was encountered is DsStSDAttachDisk.

13 At the **:** prompt type **q** then press **Return/Enter**.

- **pg** exits from the Request Manager server debug log file.

14 If the request is a trivial request, go to Step 22.

15 If the request is a non-trivial request, open a separate UNIX window.

- The results of related operations on the server involved in performing copy or ftp functions for the transaction are going to be checked in a separate UNIX window.

16 In the new UNIX window log in to the appropriate server host (e.g., e0drg11, g0drg01, l0drg01, n0drg01) for the server involved in performing copy or ftp functions for the transaction.

- Logging in to a server host is described in Steps 1 through 7 of the procedure for **Log in to System Hosts** (previous section of this lesson).

17 At the shell prompt type **grep '*TransactionId*' *filename* | grep 'LogProgress'** then press **Return/Enter**.

- For example:

  grep 'af610628-' EcDsStArchiveServerDebug.log | grep '*LogProgress*'

- ***filename*** refers to the name of the log file for the process involved in performing copy or ftp functions for the transaction.
- ***TransactionId*** refers to the Transaction ID associated with the applicable request.
- In this example af610628-1dd1-11b2-a047-af3a589fd88e is the relevant Transaction ID.
  - However, usually it is not necessary to use the entire Transaction ID in the command; a representative sample (e.g., af610628- from the example) should be sufficient.

– References to other Transaction IDs and entries that do not contain the string "LogProgress" are filtered out so references to the specified Transaction ID that contain the string "LogProgress" are the only log entries displayed.

  · The string "LogProgress" is a filter for references to stored procedure DsStGRLogProgress.

– Progress is logged for copy and ftp input/output at each block.

– The following type of response is displayed:

```
06/26/01 12:46:00:  Thread ID : 65674 : myTransactionList[1]: exec
DsStGRLogProgress "af610628-1dd1-11b2-a047-
af3a589fd88e:PDPSSDSV1DSDD1DSDD10DSDD1DSDD1:MoPGE02#sy14182000TS2SC:M
OD03.001:55732", 0, 1, "files" | Thread 65674
06/26/01 12:46:00:  Thread ID : 65674 : DBIF:Execute: Ultimate SQL:
exec DsStGRLogProgress "af610628-1dd1-11b2-a047-
af3a589fd88e:PDPSSDSV1DSDD1DSDD10DSDD1DSDD1:MoPGE02#sy14182000TS2SC:M
OD03.001:55732", 0, 1, "files" | Thread 65674
06/26/01 12:46:43:  Thread ID : 65674 :  : 06/26/01 12:46:43: read ID
: 2:46:43: myTransactionmyTransactionList[1]: exec DsStGRLogProgress
"af610628-1dd1-11b2-a047-
af3a589fd88e:PDPSSDSV1DSDD1DSDD10DSDD1DSDD1:MoPGE02#sy14182000TS2SC:M
OD03.001:55732", 60, 60, "MB"List[1]: exec DsStGRLogProgress
"af610628-1dd1-11b2-a047-
af3a589fd88e:PDPSSDSV1DSDD1DSDD10DSDD1DSDD1:MoPGE02#sy14182000TS2SC:M
OD03.001:55732", 60, 60, "MB"65714read 65674 : 74
06/26/01 12:46:43:  Thread ID : 65674 : DBIF:Execute: Ultimate SQL:
exec DsStGRLogProgress "af610628-1dd1-11b2-a047-
af3a589fd88e:PDPSSDSV1DSDD1DSDD10DSDD1DSDD1:MoPGE02#sy14182000TS2SC:M
OD03.001:55732", 60, 60, "MB"0DBIF:Execute: Ultimate SQL: exec
DsStGRLogProgress "af610628-1dd1-11b2-a047-
af3a589fd88e:PDPSSDSV1DSDD1DSDD10DSDD1DSDD1:MoPGE02#sy14182000TS2SC:M
OD03.001:55732", 60, 60, "MB"06/26/01 12:46:43: 6/26/01 12:46:43:  |
Thread  : 65714read 65674 : 74
```

- If no progress is indicated, go to Step 22.

18 Click in the UNIX window for the Distribution Server host.

19 In the UNIX window for the Distribution Server host type **cd /usr/ecs/*MODE*/CUSTOM/logs** then press **Return/Enter**.

20 Type **grep '*TransactionId*' *filename* | grep 'Done servicing'** then press **Return/Enter**.

- ***filename*** refers to the appropriate Request Manager debug log.
- For example:

  grep 'af610628-' EcDsStRequestManagerServerDebug.log | grep 'Done servicing'

- If the operation has been completed, the following type of response is displayed:

```
06/26/01 12:46:00:  Thread ID : 52 : af610628-1dd1-11b2-a047-
af3a589fd88e:PDPSSDSV1DSDD1DSDD10DSDD1DSDD1:MoPGE02#sy14182000TS2SC:M
OD03.001:55732 Done servicing | Thread 52
06/26/01 12:46:44:  Thread ID : 52 : af610628-1dd1-11b2-a047-
af3a589fd88e:PDPSSDSV1DSDD1DSDD10DSDD1DSDD1:MoPGE02#sy14182000TS2SC:M
OD03.001:55732 Done servicing | Thread 52
06/26/01 12:46:45:  Thread ID : 52 : af610628-1dd1-11b2-a047-
af3a589fd88e:PDPSSDSV1DSDD1DSDD2DSDD1DSDD3:MoPGE02#sy14182000TS2SC:MO
D03.001:55732 Done servicing | Thread 52
06/26/01 12:46:47:  Thread ID : 52 : af610628-1dd1-11b2-a047-
af3a589fd88e:PDPSSDSV1DSDD1DSDD2DSDD1DSDD3:MoPGE02#sy14182000TS2SC:MO
D03.001:55732 Done servicing | Thread 52
06/26/01 12:46:47:  Thread ID : 52 : af610628-1dd1-11b2-a047-
af3a589fd88e:PDPSSDSV1DSDD1DSDD2DSDD1DSDD7:MoPGE02#sy14182000TS2SC:MO
D03.001:55732 Done servicing | Thread 52
06/26/01 12:46:50:  Thread ID : 52 : af610628-1dd1-11b2-a047-
af3a589fd88e:PDPSSDSV1DSDD1DSDD2DSDD1DSDD7:MoPGE02#sy14182000TS2SC:MO
D03.001:55732 Done servicing | Thread 52
06/26/01 12:46:51:  Thread ID : 52 : af610628-1dd1-11b2-a047-
af3a589fd88e:PDPSSDSV1DSDD1DSDD4:MoPGE02#sy14182000TS2SC:MOD03.001:55
732 Done servicing | Thread 52
06/26/01 12:46:56:  Thread ID : 52 : af610628-1dd1-11b2-a047-
af3a589fd88e:PDPSSDSV1DSDD1DSDD4:MoPGE02#sy14182000TS2SC:MOD03.001:55
732 Done servicing | Thread 52
06/26/01 12:46:56:  Thread ID : 52 : af610628-1dd1-11b2-a047-
af3a589fd88e:PDPSSDSV1DSDD1DSDD8:MoPGE02#sy14182000TS2SC:MOD03.001:55
732 Done servicing | Thread 52
06/26/01 12:46:59:  Thread ID : 52 : af610628-1dd1-11b2-a047-
af3a589fd88e:PDPSSDSV1DSDD1DSDD8:MoPGE02#sy14182000TS2SC:MOD03.001:55
732 Done servicing | Thread 52
```

  - The statement "Done servicing" shows that the operation has been completed; however, it provides no indication as to whether the operation succeeded or failed.
  - If "Done servicing" is followed by "Unable to service," (as described in Step 19) the operation failed.

- If the operation has not been completed, no file entries are displayed (the UNIX prompt is displayed).
  - It may just be slow to complete.
- If the operation has been completed, go to Step 19.
- If the operation has not been completed, go to Step 20.

21 Type **grep '*TransactionId*' *filename* | grep 'Unable to service'** then press **Return/Enter**.

- ***filename*** refers to the appropriate Request Manager debug log.

- For example:

  grep '2a7d4168-' EcDsStRequestManagerServerDebug.log | grep 'Unable to service'

- If the request has failed, the following type of response is displayed:

```
06/26/01 12:56:22:  Thread ID : 52 : 2a7d4168-1dd2-11b2-8c52-
99d0f708dce5:PDPSSDSV1:MoPGE02#sy14182000TS2MOD02OBC Unable to
service | Thread 52
06/26/01 12:56:22:  Thread ID : 52 : 2a7d4168-1dd2-11b2-8c52-
99d0f708dce5:PDPSSDSV4:MoPGE02#sy14182000TS2MOD02OBC Unable to
service | Thread 52
```

  - If the operation has failed, return to Step 7.

- If the operation has not failed, no file entries are displayed (the UNIX prompt is displayed).

22 If the operation has not failed, at the shell prompt type **tail -f *filename* | grep '*TransactionId*'** then press **Return/Enter**.

- ***filename*** refers to the appropriate Request Manager debug log.
- ***TransactionId*** refers to the Transaction ID associated with the applicable request.
- For example:

  tail -f EcDsStRequestManagerServerDebug.log | grep 'af610628-'

- If new entries are being posted to the log, the operation has not finished yet.
  - If the same entries continue to be repeated over and over, it may be necessary to restart the server.
- If it is necessary to exit from a tailed log, type **^c** [Ctrl c] then press **Return/Enter**.

23 If the operation has not finished yet, monitor the tailed log for a while.

- If the operation does not seem to finish (i.e., if entries continue to be made to the tailed log) after a reasonable period of time (e.g., 30 minutes), it may be necessary to restart the Request Manager server.
- If it is necessary to exit from a tailed log, type **^c** [Ctrl c] then press **Return/Enter**.

24 If problems were detected in the Request Manager server debug log and/or the log file for the process involved in performing copy or ftp functions for the transaction, it may be necessary to restart the server(s) performing those functions.

- If server restart does not resolve the problem, it is appropriate to notify the Help Desk and prepare a Trouble Ticket.

25 If no problems were detected in the Request Manager server debug log or the log file for the process involved in performing copy or ftp functions for the transaction, check the Science Data Server log files; use the procedure for **Checking Server Log Files** described earlier in this lesson.

Changing Debug Levels for Server Logs

The default debug level for debug logs and application logs is controlled by parameter settings in the Configuration Registry. To conserve system resources (e.g., disk space), the default debug level settings may turn the logging off, or severely limit the amount of information written to the logs. The result may be that the logs do not capture needed troubleshooting information that would otherwise be reflected in log entries. There is a utility, **EcLgLogCtrlStart**, that can be used to change the debug level on the fly, i.e., while a server is running and without the need to reboot. This utility permits operators or support personnel to set the debug level for debug logs or application logs for certain servers so that the logs record more detailed information for troubleshooting. This does not change the parameter settings in the Registry; the next time the server is booted, it will use the parameters in the Registry to set the debug level for its logs.

The EcLgLogCtrlStart utility is invoked by a command of the form:

EcLgLogCtrlStart <*MODE*> -t <*D|A*> -l <*logLevel*> <*servicename*>

where **-t** specifies the designation of the type of log, either **D** (debug) or **A** (application), **-l** specifies the designation of a new debug level (***logLevel***) with value **0** - **3**, and ***servicename*** is the server logical name associated with a server, as specified in Table 2.

Table 2. Server Logical Names

Server	serverLogicalName
EcDsDistributionServer	DsDdRequestMgrIDL
EcDsScienceDataServer	DsShConnectionIDL
EcDsStRequestManagerServer	DsStReqMgrIDL
EcMsAcOrderSrvr	EcAcOrderMgr
EcMsAcRegUserSrvr	MsAcUsrProfileMgr
EcDsHdfEosServer (1 –3)	EcDsHdfEosServer_<n>_G2
EcDmDictServer	EcSrTransportDDICT
EcGwDARServer	EcSrTransportDarServer
EcInGran or EcInGran<n>	EcSrTransportEcInGran or EcSrTransportEcInGran<n>
EcSbSubServer	EcSrTransportSubServer
EcInReqManager	InRequestMgrIF
EcInAuto	InAutoIngestIF

Suppose that you suspect a problem with the Science Data Server in the OPS mode and want to set the debug level of its debug log to 3, to provide a full trace of events in which the server is involved. Use the following procedure.

Using EcLgLogCtrl Start to Change a Log Debug Level (Procedure 2.3)

1 Log in to the host for the server and log(s) to be changed (in this case, the host for Science Data Server -- i.e., **e0acs05**, **g0acs03**, **l0acs03**, or **n0acs04**).

2 Type **cd /usr/ecs/OPS/CUSTOM/utilities** and then press the **Return/Enter** key.

- The prompt reflects the change to directory **/usr/ecs/<*MODE*>/CUSTOM/utilities**.

3 Type **EcLgLogCtrlStart OPS -t D -l 3 DsShConnectionIDL** and then press the **Return/Enter** key.

- The debug level of the OPS Science Data Server debug log is changed to 3.

Recovering from a Connectivity Problem

If a review of relevant log files suggests that there may be a problem with connectivity, there are several actions that may help restore server and communications accessibility. Use the following procedure. The procedure starts with the assumption that the operator is logged in to the system.

Recovering from a Connectivity Problem (Procedure 3.1)

1 Ensure the "up" status of the host(s) and server(s) in question using WhatsUp Gold, Whazzup???, and ECS Monitor to view the status of hosts and application servers, and use a server startup script to restart any server that is down (refer to Procedure 1.1, **Check the Status of Hosts and Servers**).

- Refer to specific procedures in previous sections of this lesson and Sections 7.1 and 7.2 of 611-EMD-001, *Release 7.10 Mission Operation Procedures for the EMD Project*.

2 From the command line prompt, execute a ping of all servers (apply the procedure **Using EcCsIdPingServers to determine server status**, previous section of this lesson) and note the response of the server(s) in question.

- The response should indicate for each server that a connection was made (**We made a connection with EntryId = <*server location and name*>**).
- If the server does not respond, return to Step 1; if the server cannot be started and the problem cannot be resolved without help in a reasonable time, it is appropriate to call the help desk and submit a trouble ticket.

3 To ensure that the Name Server is up in the mode being used, log in to the host for the Name Server, type **ps -ef | grep EcCsIdNameServer**.

- There should be indication that the server is running, similar to the following:

```
cmshared 10295797 1 0 11:48:07 ? 0:13 /usr/ecs/OPS/CUSTOM/bin/CSS/EcCsIdName
    Server EcCsNameServer_OPS 6000400 f2s
```

- If the Name Server is not up, start it in the mode being used [see procedure **Check the Status of Hosts and Servers (Procedure 1.1)**].

4 On the host for the Name Server, use the procedure **Checking Server Log Files (Procedure 2.1)** (previous section of this lesson) to examine the Name Server debug log **EcCsIdNameServerDebug.log** for evidence of lookup activity by the application server(s). It may be helpful to use the search capability to search the file for reference to the host or server with which communication appears disrupted (e.g., while viewing the file, type **/g0mss21** and then press the **Return/Enter** key).

- The log should contain entries similar to the following:

```
FoNsNameServer: FoNsEndPointList Lookup (FoIpEndPoint&) called

FoNsNameServer::Lookup - inEndPoint Dump =

FoIpEndPoint =

EntryId     p0mss21:37217:21251

Host        g0mss21

BindingInfo        0x1046d4d8

myBindingInfo isA 308

BindingInfo isA 308

BindingInfo Host g0mss21

BindingInfo Port 37217

ProcessId   21251

ProcessName

ProcessType

ProcessMode

StringId    TS2

SubsystemId

Service     EcAcOrderMgr

myServiceInstance
```

Spacecraft

IpcType

Mode

Group

User

Role

ProxyId 0

- If the log does not reflect appropriate lookup activity, then it may be necessary to restart the name server. If the restart does not solve the problem, go to Step 6.

5 On the host(s) for the application servers, use the procedure **Checking Server Log Files (Procedure 2.1)** (previous section of this lesson) to examine the application server debug log(s) for evidence of successful communication activity.

- Use the search capability to search the file for the date and approximate time of the problem (e.g., while viewing the file, type **/*date time*** [e.g., **/07/18/01 06:30**] and then press the **Return/Enter** key). Successful communication activity may be reflected in different ways depending on the hosts and servers involved, but there should be indication of requests succeeding, as in the following example:

07/18/01 06:30:53: InRequestServer::RoutineCleanUp current time: 07/18/01 06:30:53

07/18/01 06:30:54: Thread ID : 65552 : InDBAccess.C:1333

InDBAccess::ExecuteStoredProc: ct_results resType of CS_STATUS_RESULT

07/18/01 06:30:54: Thread ID : 65552 : InDBAccess.C:1433

InDBAccess::ExecuteStoredProc ct_results resType of CS_CMD_SUCCEED

07/18/01 06:30:54: Thread ID : 65552 : InDBAccess.C:1411

InDBAccess::ExecuteStoredProc: ct_results resType of CS_CMD_DONE

07/18/01 06:30:54: Thread ID : 65552 : InRequestServer::RoutineCleanUp call to

InRequestProcessHeader::DeleteCompletedRequests succeeded

07/18/01 06:30:54: Thread ID : 65552 : InRequestProcessHeader::GetExpiredRequests: ct_results resType of CS_ROW_RESULT

07/18/01 06:30:54: Thread ID : 65552 : InRequestProcessHeader::GetExpiredRequests: numCols: 2

07/18/01 06:30:54: Thread ID : 65552 : InRequestProcessHeader::GetExpiredRequests: ct_results res_type of CS_CMD_DONE

07/18/01 06:31:06: Thread ID : 65536 : InUpdateUR::GetURGroup Sending dataType = 1A11 to Advertising

07/18/01 06:31:06: Thread ID : 65536 : InUpdateUR::GetURGroup

DataService: 1A11.001Insert

07/18/01 06:31:06: Thread ID : 65536 : InUpdateUR::GetURGroup Sending dataType = 1B01 to Advertising

07/18/01 06:31:06: Thread ID : 65536 : InUpdateUR::GetURGroup

DataService: 1B01.001Insert

07/18/01 06:31:06: Thread ID : 65536 : InUpdateUR::GetURGroup Sending dataType = 1B01BR to Advertising

- Communication failure may be reflected in entries such as the following:

07/18/01 16:08:31: DsDdRequestMgrServer: Trying to connect to the EcAcOrderCMgr in mode TS2

07/18/01 16:08:31: Client Path for Ping: cdsping /.:/subsys/ecs/TS2/EcAcOrderManagerObj

CCSMdwNameServer::LookupServer: No server registered on NameServer, server name =EcAcOrderMgr

CCSMdwRwNetProxy::CreateConnection: error

reason: FoIpPtToPtPortal - The end point does not contain any binding info., errno =0, pid =14333

07/18/01 16:08:31: Thread ID : 1 : EcAcOrderCMgr.cxx : Server is not listening

- If there is evidence of communication failure, it may be necessary to restart the application server(s), and execute the procedure **Recovering from a Database Access Problem (Procedure 4.1)** (next section of this lesson) or **Recovering from a Missing Mount Point Problem (Procedure 5.1)** (subsequent section of this lesson).

6 If restarting servers does not resolve the problem, then it is appropriate to contact the Help Desk and write a Trouble Ticket.

Recovering from a Database Access Problem

Sybase is the database engine for most system data stores. If a server is unable to access the database, or if there is some other problem with Sybase, system operation will be impaired. Use the following procedure to recover from a database access problem.

Recovering from a Database Access Problem (Procedure 4.1)

1 Log-in to the Sybase host for the appropriate server.

- Hosts for the various Sybase servers at the different DAACs are listed in document 920-TD*x*-009, where *x* is **E** for **LP DAAC, L** for **LaRC**, **G** for **GSFC**, or **N** for **NSIDC**.

2 Type **ps -ef | grep dataserver** (or **ps -ef | grep Sybase**, or **ps -ef | grep ora**), and then press the **Return/Enter** key.

- If active Sybase (or Oracle) dataserver processes are displayed, go to Step 3.
- If no active Sybase (or Oracle) dataserver processes are displayed, have the Database Administrator restart Sybase.

3 If examining processes on the Sybase host for SDSRV (e.g., **e0acg01**, **g0acg01**, **l0acg02**, **n0acg01**), it is important that the Sybase start time is prior to the start time of SQS. To check this, type **ps -ef | grep sqs**, and then press the **Return/Enter** key. (***Note***: If not on the host for SDSRV, this does not apply; go to Step 4.)

- If an active SQS process is displayed normally with a start time after the start time of the Sybase dataserver processes, go to Step 4.
- If SQS process start time is prior to the start time of the Sybase dataserver processes, have the Database Administrator restart SQS.

4 Log-in to the host for the appropriate application server.

- Hosts for the various custom applications at the different DAACs are listed in Document 920-TD*x*-019, where *x* is **E** for **LP DAAC, L** for **LaRC**, **G** for **GSFC**, or **N** for **NSIDC**; a short, easy-to-use hardware/software mapping is available as document 910-TDA-005.

5 Type **grep Sybase <*logfilename*>** to check for Sybase errors.

- Any Sybase entries in entries for the named log file are displayed.

6 If one or more Sybase entries indicate an error condition, restart the server to re-establish the connection.

Recovering from a Missing Mount Point or Other File Access Problem

Correct functioning of the system is dependent on client access to needed files, which may be in a remote network location. Often, server logs can be a source of error information that suggests a resolution for an access problem. Review of a server log may indicate, for example, that a server is using a particular path to look for a file that is not at that location. The resolution may be simply to ensure that the needed file is available in the location specified in the path. Access may also be prevented by permission restrictions. Examination of a server log may reveal a failed attempt to write to a database, resulting from incorrect permissions. The resolution in this case may be simply to use a different account with the correct permissions, or to have the Database Administrator or System Administrator reset the permissions.

Mount points provide remote access to shared file systems across networks, allowing a client to attach remote directory trees to a point within its local file system. If a mount point is lost, any of a client's system functions depending upon access through that mount point to files on a remote machine will be degraded or blocked. Use the following procedure to check for and recover from a missing mount point.

Recovering from a Missing Mount Point Problem (Procedure 5.1)

1 Log-in to the machine that the server is trying to access.

- Hosts for the various custom applications at the different DAACs are listed in document 920-TD*x*-019, where the *x* is **E** for **LP DAAC, L** for **LaRC**, **G** for **GSFC**, or **N** for **NSIDC**; a short, easy-to-use hardware/software mapping is available as document 910-TDA-005.

2 Type **cd /usr/ecs/<*mode*>/CUSTOM/<*HWCI*>/<*machine_name*>/data**, press the **Return/Enter** key, and then list the contents of the directory (i.e., type **ls** and then press the **Return/Enter** key).

- For **<*HWCI*>**, enter the name of the hardware configuration item directory to be accessed (the directory **/usr/ecs/<*mode*>/CUSTOM** may be listed to display available directories). For <***machine_name***>, enter the name of the directory for the host to be accessed.

3 If the **ls** command returns nothing, that indicates that the mount point is gone; the System Administrator will have to re-establish the mount point using standard procedure guidance in the appropriate Engineering Technical Directive.

Recovering from a Subscription Server/NBSRV Problem

Elements of system functioning related to planning and data processing rely upon the health and correct operation of the Subscription Server (SBSRV). Many standing requests from users for notification and/or distribution of data depend upon the health and correct operation of the Spatial Subscription Server (NBSRV) and its component drivers and scripts. Archive insertions or deletions of data are accompanied by notification from the Science Data Server (SDSRV) to SBSRV or NBSRV, and in response, based on stored subscriptions, SBSRV or NBSRV initiates

actions specified in the subscriptions. Therefore, if SBSRV or NBSRV is not functioning properly or not communicating successfully with SDSRV or other system elements, system operations will be impaired. Use the following procedure to ensure that SBSRV and NBSRV are functioning properly or to recover from a problem with subscriptions.

Recovering from a Subscription Server/NBSRV Problem (Procedure 6.1)

1 Check to ensure that the subscription server is up and listening.

- Use **Whazzup??** to monitor the status of the subscription server on the Interface Server host [see the procedure to **Check the Status of Hosts and Servers (Procedure 1.1)**].
- If the server is up, go to Step 2.
- If SBSRV is down, use the procedure **Check the Status of Hosts and Servers (Procedure 1.1)** (previous section of this lesson) to restart the server.

2 On the APC Server host (e.g., **e0acg11**, **g0acg01**, **l0acg02**, **n0acg01**), to check whether the Spatial Subscription Server (NBSRV) drivers are running, type **ps -ef | grep Driver.pl** and then press the **Return/Enter** key.

- If the drivers are running (i.e., UNIX returns a list of active processes for NBSRV drivers in a form similar to the following), go to step 3:

```
cmshared    5726854    4341616  0 11:20:06 pts/65  0:01
/tools/bin/perl /usr/ecs/TS2/CUSTOM/utilities/EcNbActionDriver.pl
cmshared    5727472    3489768  0 11:20:06 ?       0:01
/tools/bin/perl /usr/ecs/TS2/CUSTOM/utilities/EcNbActionDriver.pl
cmshared    4341123          1  0 14:45:19 pts/65  0:02
/tools/bin/perl /usr/ecs/TS2/CUSTOM/utilities/EcNbRecoverDriver.pl
cmshared    5728306    3582561  0 11:20:05 ?       0:01
/tools/bin/perl /usr/ecs/TS2/CUSTOM/utilities/EcNbActionDriver.pl
cmshared    5728464    4340446  0 11:20:06 pts/65  0:01
/tools/bin/perl
/usr/ecs/TS2/CUSTOM/utilities/EcNbSubscribedEventDriver.pl
cmshared    5728998    4340243  0 11:20:06 pts/65  0:01
/tools/bin/perl /usr/ecs/TS2/CUSTOM/utilities/EcNbActionDriver.pl
cmshared    5729490    4340830  0 11:20:06 pts/65  0:00
/tools/bin/perl
/usr/ecs/TS2/CUSTOM/utilities/EcNbDeleteRequestDriver.pl
cmshared    5729594    3460400  0 11:20:07 ?       0:00
/tools/bin/perl
/usr/ecs/TS2/CUSTOM/utilities/EcNbDeleteRequestDriver.pl
cmshared    5729998    3581621  0 11:20:06 ?       0:01
/tools/bin/perl
/usr/ecs/TS2/CUSTOM/utilities/EcNbSubscribedEventDriver.pl
cmshared    5641519    3582455  0 11:20:06 ?       0:01
/tools/bin/perl
/usr/ecs/TS2/CUSTOM/utilities/EcNbSubscribedEventDriver.pl
cmshared    5720551    4337841  0 11:20:06 pts/65  0:01
/tools/bin/perl
/usr/ecs/TS2/CUSTOM/utilities/EcNbSubscribedEventDriver.pl
cmshared    5722570    3581536  0 11:20:06 ?       0:01
/tools/bin/perl /usr/ecs/TS2/CUSTOM/utilities/EcNbActionDriver.pl
```

```
cmshared    3552953    3582504  0   Feb 20 ?       0:02
/tools/bin/perl /usr/ecs/TS2/CUSTOM/utilities/EcNbRecoverDriver.pl
cmshared    5723291    3376409  0 11:20:06 ?       0:01
/tools/bin/perl
/usr/ecs/TS2/CUSTOM/utilities/EcNbSubscribedEventDriver.pl
```

- If there is not at least one active Action Driver (**EcNbActionDriver.pl**) and one active Event Driver (**EcNbSubscribedEventDriver.pl**), it will be necessary to start the drivers using the start script. The start script is **EcNbDriverStart**; it is located with other start scripts in the directory **/usr/ecs/<*MODE*>/CUSTOM/utilities**. To start NBSRV drivers, the command is:

  EcNbDriverStart <*MODE*> d_e d_a d_r d_d

  where **<*MODE*>** is the mode in which Data Pool is being run, d_e is the number of event drivers, d_a is the number of action drivers, d_r is the number of recovery drivers, and d_d is the number of deletion drivers. For example, to start the drivers in the OPS mode with the beginning recommendation, use the command **EcNbDriverStart OPS 3 3 1 1**.

3 Use the NBSRV GUI to add an FtpPush subscription for insertion of a small data file (e.g., AST_L1BT).

- Use appropriate procedures [e.g., **Use the Spatial Subscription Server GUI to Add a Subscription to the NBSRV Database** (Document 611-EMD-001, *Release 7.10 Mission Operation Procedures for the EMD Project*, Section 19.4.5)].

4 Use the NBSRV GUI to view the subscription (see Document 611-EMD-001, Section 19.4.4).

- If the subscription is accessible on the NBSRV GUI, go to Step 6; otherwise, continue with Step 5.

5 Have the Database Administrator (DBA) log into Sybase using the UserName and Password that the NBSRV Action Driver is using.

- Have the DBA log on to the NBSRV database host (e.g., **e0acg11**, **g0acg01**, **l0acg02**, **noacg01**). Change to the directory **/usr/ecs/<*MODE*>/COTS/sybase/bin**. Then type **isql -Unbsub_role -S*x*0acg*nn*_srvr**, and press the **Return/Enter** key, and, when prompted, enter the appropriate password.
- If the Sybase access attempt is successful, the ISQL prompt **1>** is displayed. Type **exit** and press the **Return/Enter** key.
- If the Sybase access attempt is not successful (i.e., the ISQL prompt is not displayed), it may be necessary to restart Sybase, using appropriate procedures (see **Starting and Stopping Database Servers**, Document 611-EMD-001, Section 4.1).

6 If the problem is apparently with a subscription created by the Planning subsystem using the original Subscription Server in the Communications Subsystem, have the DBA log

into Sybase using the UserName and Password that the server is using. (*Note*: This step is not applicable at NSIDC.)

- Have the DBA log on to the SBSRV database host (e.g., **e0ins01**, **g0ins01**, **l0ins01**). Change to the directory **/usr/ecs/<*MODE*>/COTS/sybase/bin**. Then type **isql -Uncss_role -S*x*0ins01_srvr**, and press the **Return/Enter** key, and, when prompted, enter the appropriate password.
- If the Sybase access attempt is successful, the ISQL prompt **1>** is displayed. Type **exit** and press the **Return/Enter** key.
- If the Sybase access attempt is not successful (i.e., the ISQL prompt is not displayed), it may be necessary to restart Sybase, using appropriate procedures (see **Starting and Stopping Database Servers**, Document 611-EMD-001, Section 4.1).

7 If the subscription action is triggered appropriately but there is still a problem, it is appropriate to prepare a trouble ticket. If the subscription action is not triggered, log files for the Subscription Server or Spatial Subscription Server drivers may be helpful. On the host for the subscription server (e.g., **e0ins01**, **g0ins01**, **l0ins01**) and the host for the NBSRV action and event drivers (e.g., **e0acg11**, **g0acg01**, **l0acg02**, **n0acg01**), use the procedure **Checking Server Log Files (Procedure 2.1)** (previous section of this lesson) to examine the appropriate log(s) for evidence of successful communication activity.

- For subscription server, check **EcSbSubServerDebug.log**.
- Use the search capability to search the file for the date and approximate time of the problem (e.g., while viewing the file, type **/*date time*** [e.g., **/07/18/01 06:30**] and then press the **Return/Enter** key). Successful communication activity is often reflected in different ways depending on the hosts and servers involved, but there should be indication of requests succeeding, as in the following example from **EcSbSubServerDebug.log**:

```
01/15/02 13:44:03:  Thread ID : 36 :
EcSbGetEventRequest:GetEventData: GetEventData =
             EventID: 6
             Creator:
           EventName: AM1ANC.001:INSERT
       EventCategory: Subscribe
    EventDescription: A granule of AM1ANC type was added to the
DataServer's holdings
     EventAttributes: -Event Results[
--SizeMBECSDataGranule[]
--LocalGranuleID[]
--ProductionDateTime[]
--ShortName[]
--VersionID[]
--RangeBeginningTime[]
--RangeEndingTime[]
--RangeBeginningDate[]
--RangeEndingDate[]
--PDS_ID[]]

01/15/02 13:44:03: EcSbGetEventRequest:GetEventData: Succeeded.
```

```
CCSMdwIfMgr::myCurrentSocketTotal = 3
CCSMdwIfMgr::myCurrentSocketTotal = 3
CCSMdwIfMgr::myCurrentSocketTotal = 4
CCSMdwIfMgr::myCurrentSocketTotal = 3
01/15/02 13:44:04:  Thread ID : 66 :
CCSMdwRwNetService::HandleReceive: received CCSMdwEnvelope from host
= p0acs03, pid = 18591, receiver's service name
=EcSrTransportSubEventServer on InterfaceId = 28

01/15/02 13:44:04:  Thread ID : 58 : Connection OK
01/15/02 13:44:04: SRF: GetStatus requested for requestID = d962e7f4-
1dd1-11b2-bbc4-8423b58e633f
01/15/02 13:44:04:  Thread ID : 58 : execute Sql command : set
textsize 0
01/15/02 13:44:04:  Thread ID : 58 : Connection OK
01/15/02 13:44:04:  Thread ID : 58 : Add request  to
EcSbTriggerRequest Table successfully.
01/15/02 13:44:04:  Thread ID : 29 :  ++++++++++++++++++++
SubWorkOff wake up +++++++++
01/15/02 13:44:04: EcSbTriggerEventRequest:Trigger: Succeeded.
01/15/02 13:44:04:  Thread ID : 58 : Thread isn't cancelled after
dispatch
01/15/02 13:44:04:  Thread ID : 29 : === ProcessSubWorkOff thread
01/15/02 13:44:04:  Thread ID : 66 : === ::SaveTo() ===
------------- Dump of RPC ID ---------------
01/15/02 13:44:04:  Thread ID : 29 : command =
ProcGetActualAndSubInSub
Transaction ID: [d9756b90-1dd1-11b2-a5f1-f8a1b9eecbea]
Sub Transaction ID: [SBSV]
Readable tag: []
Server ID: [SBSV]
Subindex: [0]
---------------------------------------------
CCSMdwIfMgr::myCurrentSocketTotal = 4
CCSMdwIfMgr::myCurrentSocketTotal = 5
```

- If there is a problem, log entries around the time of the problem should reflect the trouble. Specific entries will vary, depending on the nature of the problem. The following provides an example of log entries related to a communications failure, taken from **EcSbSubServerDebug.log**:

```
02/25/02 13:05:24:  Thread ID : 6 : EcMpMsgQueueOut::EvalThread Ready
to Invoke
02/25/02 13:05:24:  Thread ID : 6 : EcMpMsgQueueOut::Invoke Stubs
Transmit Method
02/25/02 13:05:24:  Thread ID : 6 : CCSMdwRwNetProxy::MdwReceiveBuf:
Caught error during Receive, reason -- reason: FoIpPtToPt Portal -
Receive Failed:  Socket Error.
Error Description = CONNRESET, errno =131, pid =9150
02/25/02 13:05:24:  Thread ID : 6 : EcMPMsgQueueOut::Invoke Failed.
Detail Site: VATC
MsgID: 3d3f7e70-1dd2-11b2-8aac-e7618278df3c Rpc Return  Status
382312469
02/25/02 13:05:24:  Thread ID : 6 :
CCSMdwProxy::SetUpRemoteServiceEndPoint caught exception error reason
= FoIpPtToPtPortal -  Socket Error.
Error Description = CONNREFUSED
```

```
02/25/02 13:05:24:  Thread ID : 6 :
CCSMdwRwNetProxy::CreateConnection: error reason: FoIpPtToPtPortal -
Socket Error.
Error Description = CONNREFUSED, errno =146, pid =9150
```

(***Note***: The "`Error Description . . . errno =`*nnn*" in the sample entry is not very informative. A slightly longer description, and sometimes a suggested corrective action, may be available on a DSS host [e.g., e0acg11, g0acg01, l0acg01, n0acg01], in a file **DsShErrorMessages.txt** in directory **/usr/ecs/<*MODE*>/CUSTOM/data/DSS**.)

- For the Spatial Subscription Server, the drivers each have an associated log in the directory **/usr/ecs/<*MODE*>/CUSTOM/logs**. The logs should reflect successful activity in a form similar to the following examples from **EcNbActionDriver.log**:

```
2002/02/13 04:17:38.302
: /usr/ecs//OPS/CUSTOM/utilities//acquire OPS -p
/usr/ecs//OPS/CUSTOM/data/SSS/Acquire.243929.206.443.prm -f
/usr/ecs//OPS/CUSTOM/data/SSS/Acquire.243929.206.443.gid -t
2002/02/13 04:17:38.321
: 243929.206.443

2002/02/13 04:17:41.076
: /usr/ecs//OPS/CUSTOM/utilities//acquire OPS -p
/usr/ecs//OPS/CUSTOM/data/SSS/Acquire.243930.206.443.prm -f
/usr/ecs//OPS/CUSTOM/data/SSS/Acquire.243930.206.443.gid -t
2002/02/13 04:17:41.094
: 243930.206.443

2002/02/13 04:17:42.903
: /usr/ecs//OPS/CUSTOM/utilities//acquire OPS -p
/usr/ecs//OPS/CUSTOM/data/SSS/Acquire.243932.206.443.prm -f
/usr/ecs//OPS/CUSTOM/data/SSS/Acquire.243932.206.443.gid -t
2002/02/13 04:17:42.922
: 243932.206.443
```

- For Spatial Subscription Server, if there is a problem, it should be reflected in log entries indicating failure around the time of the problem, as in the following example taken from **EcNbActionDriver.log**:

```
2002/02/13 07:01:39.477
: Shutdown requested for process 1143223 due to failed action 439068

2002/02/13 07:01:36.389
:     WARNING: Can't connect: OpenClient message: LAYER = (5) ORIGIN
= (3) SEVERITY = (5) NUMBER = (4)
Message String: ct_connect(): network packet layer: internal net
library error: Net-Lib protocol driver call to connect two endpoints
failed
Operating System Error: Socket connect failed - errno 22
. Waiting 1 seconds to retry...

2002/02/13 07:01:37.506
:     WARNING: Can't connect: OpenClient message: LAYER = (5) ORIGIN
= (3) SEVERITY = (5) NUMBER = (4)
Message String: ct_connect(): network packet layer: internal net
library error: Net-Lib protocol driver call to connect two endpoints
failed
Operating System Error: Socket connect failed - errno 22
```

```
. Waiting 1 seconds to retry...

2002/02/13 07:01:38.627
:     WARNING: Can't connect: OpenClient message: LAYER = (5) ORIGIN
= (3) SEVERITY = (5) NUMBER = (4)
Message String: ct_connect(): network packet layer: internal net
library error: Net-Lib protocol driver call to connect two endpoints
failed
Operating System Error: Socket connect failed - errno 22
. Waiting 1 seconds to retry...

2002/02/13 07:01:39.758
: Failed to connect to SQS after 3 tries.
```

- If the logs reflect successful communication activity but there is still a problem, it is appropriate to prepare a trouble ticket. If the logs indicate file access problems, refer to the procedure **Recovering from a Missing Mount Point Problem (Procedure 5.1)** (previous section of this lesson). If the logs indicate a database access problem, refer to the procedure **Recovering from a Database Access Problem (Procedure 4.1)** (previous section of this lesson).

Recovering from Granule Insertion Problems

Successful data storage functions are the heart of the system. Successful ingest of data or processing of data to produce new science data granules require that Storage Management (STMGT) is inserting the product into the archive and that Science Data Server (SDSRV) is inserting the associated metadata into the inventory. Staging disks and cache managers for the Archive server and the FTP server are also involved in this process. To check the functioning of these elements, it is necessary that the ESDTs are installed and available, and that subscriptions have been registered as noted in previous sections of this lesson. Have the Ingest/Distribution Technician insert a small file. Then, use the following procedure to recover from granule insertion problems.

Recovering from Granule Insertion Problems (Procedure 7.1)

1 Log into the host for SDSRV (e.g., **e0acs05**, **g0acs03**, **l0acs03**, **n0acs04**) and review the server log (**EcDsScienceDataServerDebug.log**); refer to **Checking Server Log Files** (previous section of this lesson).

- Examine the section of the log with entries near the time of the problem, looking for error messages that indicate communication failure.
- If the log file entries indicate a communication problem, note the server(s) with which there is impairment or disruption of communication.
- Repeat this step for the Archive Server (e.g., on host ***x*0drg01** where ***x*** is **g** for GSFC, **l** for LaRC, **e** for LP DAAC, or **n** for NSIDC) where the server log to examine is **EcDsStArchiveServerDebug.log**, and, as indicated in any entries referring to associated communications problems, **EcDsStStagingDiskServerDebug.log** and **EcDsStCacheManagerServerDebug.log**. Also on host ***x*0drg01**, repeat this step for the Request Manager Server (**EcDsStRequestManagerServerDebug.log**).

- As indicated in any entries referring to associated communications problems, repeat this step for the Subscription Server (e.g., on host ***x*0ins01** where ***x*** is **g** for GSFC, **l** for LaRC, **e** for LP DAAC, or **n** for NSIDC) where the server log to examine is **EcSbSubServerDebug.log**.
- If there are no apparent communications problems, go to Step 2.
- Use appropriate procedures to resolve any communications problems [refer to **Recovering from a Connectivity Problem (Procedure 3.1)** (previous section of this lesson)].
- *Note*: To run the Check Archive script **EcDsCheckArchive**, it is necessary to enter eight database-specific parameters when prompted during the running of the script: STMGT SQL server name, STMGT database name, STMGT SQL server userID, STMGT SQL server database password, SDSRV SQL server name, SDSRV database name, SDSRV SQL server userID, and SDSRV database password. To facilitate the smooth execution of the script, the parameters may be set as environmental variables instead. The parameters are not readily available to most operators; therefore, you will need to obtain them from the Database Administrator or have the Database Administrator run the script for you, using steps 2 through 4.

2 On the host for the Archive Server (***x*0drg01**), type **cd /usr/ecs/<*mode*>/CUSTOM /utilities** and then press the **Return/Enter** key.

- The prompt reflects the directory change to **/usr/ecs/<*mode*>/CUSTOM/utilities**.

3 Type **EcDsCheckArchive <*mode*>**.

- The Check Archive script runs; the displayed information should be similar to the following:

```
=================================================================
This script is designed to validate the Inventory
against the Archive.

The user must select the menu option associated with the
Volume Group to be validated

        Please press [RETURN] to continue
=================================================================
```

4 Follow the on-screen prompts for the script, entering the necessary parameters.

- The script provides indication of any discrepancies between the presence of granules in the Archive and entries in the inventory (metadata). Note that the appearance of a discrepancy is not necessarily indication of a failure (e.g., if a granule has been deleted but the inventory database has not been cleaned up, there may be inventory entries for which there are no granules in the archive), but a problem may be indicated if a discrepancy is apparent for a granule that you just inserted. Note also that this script would not reveal a problem if you attempted to insert a granule which

failed to get inserted and also had its metadata fail to be inserted into the inventory (i.e., no granule and no inventory entry = no discrepancy). Therefore, if the script reveals no discrepancies, it may still be useful to conduct a direct examination to determine if the granule has been inserted.

5 On the host for the Archive Server (***x*0drg01** [or ***x*0drg0*n***]), type the directory change command **cd /dss_stk1/<*mode*>/<*data_type_directory*>** and then press the **Return/Enter** key.

- The prompt indicates change to the **/dss_stk1/<*mode*>/<*data_type_directory*>** directory.

6 Type **ls -al | grep "<*date*>"** where **"<*date*>"** is a three-letter abbreviation for the month followed by a number indicating the day (e.g., **"Apr 21"**), and then press the **Return/ Enter** key.

- If the inserted file is displayed, with date and time of entry, go to Step 7.
- If the inserted file is not displayed, have the Ingest/Distribution Technician insert the file again. If this succeeds (i.e., the file is now listed), go to Step 7; otherwise, have the Archive Manager conduct the procedure for **Recovering from Failure to Store or Retrieve Data** (Document 611-EMD-001, Section 17.7.2).

7 Determine if the inserted file is reflected in the Inventory Database (Database Administrator function) by logging into Sybase on the host for SDSRV [use procedure similar to Steps 5 and 6 of **Recovering from a Subscription Server/NBSRV Problem (Procedure 6.1)** (previous section of this lesson)] and then selecting the data type.

- If the inserted file is reflected in the Inventory Database, go to Step 8.
- If the inserted file is not reflected in the Inventory Database, perform the procedure for **Recovery from a Database Access Problem (Procedure 4.1)** (previous section of this lesson).

8 Determine if the directory from/to which the copy is being made is visible on the machine being used; check the mount points on the Archive host and the SDSRV host [use the procedure **Recovering from a Missing Mount Point Problem (Procedure 5.1)** (previous section of this lesson)].

- If the mount points are OK, go to Step 9.
- If necessary, re-establish the mount point(s).

9 If you inserted the file with the DSS Driver, go to Step 11. If you used Ingest to insert the file, on the Ingest host (e.g., **e0icg01**, **g0icg01**, **l0acg02**, **n0acg01**) examine the **drp-** or **icl**-mounted staging directory to determine if a staging disk was created. To do this, first type **cd /usr/ecs/<*mode*>/CUSTOM/drp/<*host*>/data/staging/cache** (or type **cd /usr/ecs/<*mode*>/CUSTOM/icl/<*host*>/data/StagingArea/cache**), then press the **Return/Enter** key.

- The prompt reflects a change to the specified directory. [***Note***: Be sure that you are checking the correct mount/host. Most ingests use Ingest subsystem staging areas

(i.e., **icl**), but others may not. Media ingest (e.g., from DTF-2 tape) typically involves staging in a **dip** area. For a polling ingest for data from EDOS, the polling directory may serve as the staging area. Some data are staged directly to working storage in the Data Server subsystem. If in doubt, consult Ingest/Archive personnel.]

10 Type **ls -al | more** and then press the **Return/Enter** key.

- Any staging areas are listed in output similar to the following sample:

```
-rw-rw-r--   1 cmshared cmshared 499804704 Feb  6 11:49 :SC:MOD000.001:11856:1.CCSDS
-rw-rw-r--   1 cmshared cmshared 320663592 Feb  6 11:51 :SC:MOD000.001:11856:2.CCSDS
-rw-rw-r--   1 cmshared cmshared     540 Feb  6 11:51 :SC:MOD000.001:11856:3.CCSDS.
```

- If a staging area for the inserted file appears at the end of the list, go to Step 11.
- If no staging area appears for the inserted file, it is possible that the ingest failed and that the staging area was immediately removed as part of clean-up. Check the Ingest logs (e.g., **EcInReqMgrDebug.log**, **EcInAutoDebug.log**, **EcInGranDebug.log**, or **EcInGranDebug**.log, depending on the type of Ingest) [refer to the procedure for **Recovering from an Ingest Problem (Procedure 9.1)** (subsequent section of this lesson)] to determine if a staging disk was created. If no staging disk was created, perform the procedure **Recovering from a Connectivity Problem (Procedure 3.1)** (previous section of this lesson).

11 Have the Archive Manager ensure that the Archive volume groups are set up correctly [refer to procedure **Using Storage Management GUIs to Display Archive Path Information** (Document 611-EMD-001, Section 17.3.2)].

12 Have the Archive Manager ensure that the volume groups are on line [refer to the procedure **Using *vollist* to Display Volume Data** (Document 611-EMD-001, Section 17.7.1.3)].

13 Examine the server logs to determine if the subscription was triggered by the insertion [refer to the procedure for **Checking Server Log Files (Procedure 2.1)** (previous section of this lesson)].

- On the SDSRV host (e.g., **e0acs05**, **g0acs03**, **l0acs03**, **n0acs04**), examine **EcDsScienceDataServerDebug.log** to determine if SDSRV sent a trigger (event notification); the entry should be similar to the following:

```
04/15/02 14:49:36:  Thread ID : 32 : Insert event notification queued for granule
UR:10:DsShESDTUR:UR:15:DsShSciServerUR:13:[PVC:DSSDSRV]:20:SC:AST_EXP.00
1:76456
04/15/02 14:49:36:  Thread ID : 04/15/02 14:49:36:  Thread ID : 32 :
DsGeESDTWrapper::DecrementGranuleCount count=0
23 : DsBtSbsrvNotifier: processing INSERT for granule
UR:10:DsShESDTUR:UR:15:DsShSciServerUR:13:[PVC:DSSDSRV]:20:SC:AST_EXP.00
1:76456
04/15/02 14:49:36:  DsDeEventTable::DsDeEventTable(DsDeEventTable.cxx:38)
DsDeEventTable Being Constructed
04/15/02 14:49:36:
About to execute Statement: exec ProcGetEvent'AST_EXP','001','INSERT'
```

- On the Spatial Subscription Server (NBSRV) host (e.g., **e0acg11**, **g0acg01**, **l0acg02**, **n0acg01**), examine **EcNbActionDriver.log** to determine if NBSRV received the trigger and sent an acquire request to SDSRV; the entry should be similar to the following:

  2002/04/15 14:49:36.791
  : Sending Mail to userops@p0ins01u.ecs.nasa.gov on Mon Apr 15 14:49:36 EST 2002
  2002/04/15 14:49:36.969
  : Sent the following subscription notification to userops@p0ins01u.ecs.nasa.gov on Mon Apr 15 14:49:36 EST 2002
  2002/04/15 14:49:36.544
  : "ECS Notification for Event: AST_EXP.001:INSERT"
  2002/04/15 14:49:36.266
  : ActionId=533917, eventId=375360, subscriptionId=374
  2002/04/15 14:49:36.420
  : actionType=Acquire
  2002/04/15 14:49:36.441
  : /usr/ecs/OPS/CUSTOM/utilities//acquire OPS -p /usr/ecs/OPS/CUSTOM/data/SSS/Acquire.375360.374.933.prm -f /usr/ecs/OPS/CUSTOM/data/SSS/Acquire.375360.374.933.gid -t

- On the DDIST host (e.g., **e0dis02**, **g0dis02**, **l0dis02**, **n0dis02**), examine the log **EcDsDistributionServerDebug.log** to determine if an e-mail notification was sent to the user identified in the subscription; the output should be similar to the following:

  05/06/99 12:52:41: Media::SendNotificationMessage.(myNotify,mySite,myConfig->GetMode(),mailAddress): (, , TS1, cmts1@t1ins02u.ecs.nasa.gov
  Media::SendNotificationMessage: Getting e-mail address from configuration file.
  05/06/99 12:52:41: DdDsDoneQueue::Thread Was marked SyncDone and Signaled. RequestID= 125125210220554

- If the subscription trigger activity is not reflected in the logs, or the log shows an error message indicating trigger failure, perform the procedure for **Recovering from a Subscription Server/NBSRV Problem (Procedure 6.1)** (previous section of this lesson).

- If the logs indicate that the subscription triggers worked properly, continue with the procedure for **Handling an Acquire Failure (Procedure 8.1)** (subsequent section of this lesson).

Handling an Acquire Failure

As a first check, it is appropriate to determine if the acquire request appears in the list of System Requests on the Science Data Server GUI. If the acquire request does not appear on the Science Data Server GUI, you will need to determine where the breakdown occurred. Diagnosing an

acquire failure requires detailed examination of the following system log files and directories associated with the process:

- Science Data Server log file (EcDsScienceDataServerDebug.log).
- Archive Server log file (EcDsStArchiveServerDebug.log).
- STMGT Request Manager Server log file (EcDsStRequestManagerDebug.log)
- Staging Area.
  - Presence of the relevant file.
  - Staging Disk log files (EcDsStStagingDiskServerDebug.log or EcDsStStaging MonitorServerDebug.log).
  - Space available in the staging area.

In addition, note that a number of servers, clients, or other software running on various hosts, as reflected in Table 3, may be involved at various times in processing an acquire request. More information useful in troubleshooting may appear in related logs on these hosts.

Table 3. Hosts, Servers, Clients and Other Software Relevant to Acquires (1 of 2)

HOST	SERVER/CLIENT/OTHER SOFTWARE
Sun internal server (e.g., x0acs06)	Distribution Server (EcDsDistribution Server) 8mm Server (EcDsSt8MMServer) Storage Management Request Manager (EcDsStRequestManagerServer) Staging Disk Server (EcDsStStagingDiskServer) Granule Deletion Process (EcDsGranuleDelete) Science Data Server (EcDsScienceDataServer) Science Data Server Client (EcDsScienceDataServerClient) Subscription Server (EcSbSubServer)
Operations Workstation (e.g., x0acs02)	Data Distribution Operator GUI (EcDsDdistGui) Storage Management Control GUI (EcDsStmgtGui) Science Data Server GUI (EcDsSdSrvGui)
Access/Process Coordinators (APC) Server (e.g., x0acg01)	Archive Server (EcDsStArchiveServer) Cache Manager Servers (EcDsStCacheManagerServer) (including Pull Area Manager) FTP Server (EcDsStFtpServer) Staging Disk Server (EcDsStStagingDiskServer)

Table 3. Hosts, Servers, Clients and Other Software Relevant to Acquires (2 of 2)

HOST	SERVER/CLIENT/OTHER SOFTWARE
FSMS Server (e.g., x0drg01)	HDF EOS Server (EcDsHdfEosServer) Archive Server (EcDsStArchiveServer) Cache Manager Server (EcDsStCacheManagerServer) FTP Server (EcDsStFtpServer) Staging Disk Server (EcDsStStagingDiskServer)
Ingest Server (e.g., x0icg01)	Name Server (EcCsIdNameServer) Registry Server (EcCsRegistry)
Data Pool Server (e.g., x0dps01)	Order Manager GUI (EcOmGuiHomePage.pl)

Use the following procedure to:

- make the initial check on the Science Data Server GUI.
- follow up with checks of the Science Data Server log file, Archive Server log file, and Request Manager log file.
- determine if a failure occurred during copying of the files to a staging area (and if so, whether there is sufficient staging space available).

Handling an Acquire Failure (Procedure 8.1)

1 On the SDSRV Server host (e.g., e0acs05, g0acs03, l0acs03, n0acs04), review the server logs (**EcDsScienceDataServer.ALOG**, **EcDsScienceDataServerDebug.log**); refer to **Checking Server Log Files** (previous section of this lesson).

- Examine the section of the log with entries near the time of the problem, looking for messages that indicate whether the relevant file was successfully acquired.
- The **EcDsScienceDataServer.ALOG** file should contain entries identifying the file to be acquired by the ShortName of the corresponding ESDT; entries should be similar to the following:

```
PID : 29168:MsgLink :0 meaningfulname :DsSrSessionExecuteRequestStart0
 Msg: Request ID b5156038-03d3-11d3-8d16-c676e82eaa77:????: executing:
DsSrRequest (1): DsShSciRequestImp: [ svr: ScienceDS, pri: NORMAL domain: ]:
(DsShSciCommandImp:  service: INSERT num parameters: 3 category: Parameters are:
-UnnamedPL[SHORTNAME(AST_L1BT) VERSIONID(001)
--MAINGROUP[SHORTNAME(AST_L1BT) VERSIONID(001)
---METAFILEGROUP[METADATAFILE(/home/cmops/data/SCAST_L1BT.0011279.met)]
---DATAFILEGROUP[DATAFILE(/home/cmops/data/tahoe-north-middle.MTA)]
---DATAFILEGROUP[DATAFILE(/home/cmops/data/tahoe-north-middle.hdf)]]]
WC)
```

- The **EcDsScienceDataServerDebug.log** file should contain entries regarding the acquire activity. The following types of messages should be included in the log file:

05/06/99 12:52:01:
About to execute Statement: exec ProcInsertReqDomain 2205, "UR:10:DsShESDT UR:UR:15:DsShSciServerUR:13:[VTC:DSSDSRV]:20:SC:AST_L1BT.001:2201"
05/06/99 12:52:01:
About to execute Statement: ProcInsertAcquireCmd 2206, 2205, 3, null, null, "tester", "FtpPush", "MAIL", "FILEFORMAT", null, "jrattiga", "abc123", "t1dps04", "/home/jrattiga /push", null, null

- If the ShortName does not appear in the file, with a timestamp corresponding to the time of the attempted acquire, SDSRV may not be running, or may not be communicating with other servers. Check to be sure the server is up [refer to **Using WhatsUp Gold, Whazzup, ECS Monitor, and EcCsIdPingServers to Check the Status of Hosts and Servers** (previous section of this lesson)] and, if appropriate, check for connectivity problems [refer to **Recovering from a Connectivity Problem** (previous section of this lesson)].

- If the log file does contain entries for the relevant ShortName, and indicates that two files (the file and its associated metadata file) are being distributed, SDSRV has completed its role in the acquire. Go to the next step.

- If the ALOG contains the ShortName, and also contains an error showing that the data file time stamp does not match the time stamp required by the acquire, the data file needs to be removed from the Science Data Server and reinserted.

  – This is usually done using a script called DsDbCleanGranules.

2 To inspect the Archive Server log and Request Manager Server log for error messages associated with the acquire, on the Archive host (e.g., **e0drg01**, **g0drg01**, **l0drg01**, **n0drg01**), review the respective server logs (**EcDsStArchiveServerDebug.log**, **EcDsStRequestManagerServerDebug.log**); refer to **Checking Server Log Files** (previous section of this lesson).

- Examine the sections of the logs with entries near the time of the problem, looking for messages that indicate whether the Request Manager handled the request and whether the Archive Server log shows that the relevant file was successfully acquired.

- If the logs indicate that the relevant file was successfully acquired, go to the next step.

- If the file was not successfully acquired, have the Archive Manager perform the procedure **Recovering from Failure to Store or Retrieve Data** (Document 611-EMD-001, Section 17.7.2) to troubleshoot and correct any AMASS problems.

3 To determine whether the file being acquired (or a link to it) and its associated metadata file arrived in the Data Distribution staging area, on the Distribution Server (e.g.,

e0dis02, **g0dis02**, **l0dis02**, **n0dis02**) type **cd /usr/ecs/<*mode*>/CUSTOM/drp/<*archivehost*>/data/staging/cache** and then press the **Return/Enter** key.

- The prompt indicates the change to the specified directory.

4 Type **ls -lrt** and then press the **Return/Enter** key.

- The contents of the directory are displayed.

5 Review the listing to determine whether the relevant file and its metadata file arrived in the staging area.

- The display should contain entries similar to the following:

```
lrwxrwxr-x  1 cmshared cmshared  75 Apr 26 12:52 L7CPF19980518_19980518.01 ->
/usr/ecs/TS1/CUSTOM/drp/raven/data/staging/cache/:SC:L7CPF.001:1427:1.ASCII
-rw-rw-rw-   1 cmshared cmshared   14802 Apr 26 12:52 SCL7CPF.0011427.met
-rw-rw-r--   1 cmshared cmshared    111 Apr 26 13:01 staging.disk.filename.list
-rw-rw-r--   1 cmshared cmshared   2044 Apr 26 13:01 PACKING.LST.115124935248431
```

- If the relevant files were not successfully staged, the staging log files may reveal the cause; go to Step 7.
- If the relevant files were successfully staged, an acquire failure could be a result of problems with related servers or software (see Table 1). Ensure that the necessary hosts and servers are up [refer to **Using WhatsUp Gold, Whazzup, ECS Monitor, and EcCsIdPingServers to Check the Status of Hosts and Servers** (previous section of this lesson)].

6 To inspect the Staging Disk log for error messages associated with the acquire, on the APC Server host (e.g., **e0acg01**, **g0acg01**, **l0acg02**, **n0acg01**), review the server logs (e.g., **EcDsStStagingDiskServerDebug.log**; **EcDsStCacheManagerServerDebug.log**); refer to **Checking Server Log Files** (previous section of this lesson).

- Examine the section of each log with entries near the time of the problem, looking for messages that indicate whether the relevant files were successfully staged.
- If the relevant files were not successfully staged, the cause may be a lack of space in the staging area; go to Step 8.
- If the relevant files were successfully staged, an acquire failure could be a result of problems with related servers or software (see Table 1). Ensure that the necessary hosts and servers are up [refer to **Using WhatsUp Gold, Whazzup, ECS Monitor, and EcCsIdPingServers to Check the Status of Hosts and Servers** (previous section of this lesson)].

7 To check the space available in the staging area, on the Distribution Server (e.g., **e0dis02**, **g0dis02**, **l0dis02**, **n0dis02**) type **cd /usr/ecs/<*mode*>/CUSTOM/drp/<*archivehost*>/data** and then press the **Return/Enter** key.

- The prompt indicates the change to the specified directory.

8 Type **df -k .** (be sure to include the "**.**") and then press the **Enter** key.

- The filesystem, staging disk space capacity in kbytes, amount used, amount available, and percent of capacity are displayed, as in the following example:

```
Filesystem          kbytes    used   avail capacity  Mounted on
t1drg01:/usr/ecs/TS1/CUSTOM/drp/t1drg01/data
                  225209856 173253056 51956800    77%
/data1/ecs/TS1/CUSTOM/drp/t1drg01/data
```

- If there is not adequate space for staging the relevant files, it will be necessary to free up additional space (e.g., by purging expired files from cache).

Recovering from Ingest Problems

Ingest problems may vary significantly, with symptoms manifested that are specific to the type of Ingest being attempted. If a problem occurs, there is usually helpful information available on the Ingest GUI and it should be examined first. Ingest's many interfaces with other subsystems mean that ingest problems may be traced not only to the Ingest subsystem itself, but also to numerous other subsystems. Moreover, Ingest has interfaces with external data providers, and therefore problems may often be traced to communications with them. The Ingest lesson (Document 625-EMD-008) provides detailed information on tracing Ingest problems, and if a problem occurs, the Ingest Technician/Archive Manager may often be able to resolve it through application of some of the procedures described in that lesson. Specifically, the Ingest Technician/Archive Manager should initially examine error indications and data available on the Ingest GUI and review relevant log files for error indications, including logs for the Ingest GUI, the Ingest Request Manager, the Ingest Granule Server, and the relevant Ingest Client. Ingest personnel can also perform procedures for:

- **Recovering from a Faulty Delivery Record or Other File Problems**.
- **Recovering from Exceeding the Volume Threshold**.
- **Recovering from Exceeding the Maximum Number of Concurrent Requests**.
- **Recovering from Insufficient Disk Space**.
- **Recovering from Exceeding the Expiration Date/Time Period**.
- **Recovering from File Transfer (ftp) Error**.
- **Recovering from Processing Errors**.
- **Recovering from DTF-2 Ingest Failures.**

If they are unable to solve the problem, there may be some additional troubleshooting related to granule insertion that will be helpful. After Ingest personnel exhaust relevant troubleshooting procedures from the Ingest lesson (Document 625-EMD-008), use the following procedure to

ensure that the manifested Ingest Problem does not reflect granule insertion problems. If the problem cannot be identified and fixed without help within a reasonable period of time, the appropriate response is to call the help desk or submit a trouble ticket in accordance with site Problem Management policy.

Recovering from Ingest Problems (Procedure 9.1)

1 Have the Ingest Technician perform a test ingest of an appropriate type (i.e., polling ingest of MODIS L0 data, ingest of AST_L1BT data from DTF-2 tape, polling ingest of Attitude data without delivery record, polling ingest of data with delivery record), depending on the type of ingest associated with the problem.

2 Ensure that the insertion worked normally and that the insertion is reflected in the Archive and Inventory Databases, and perform any necessary corrective actions if the insertion did not work.

- Use the procedure for **Recovering from Granule Insertion Problems (Procedure 7.1)** (previous section of this lesson).

Recovering from PDPS Plan Creation/Activation and PGE Problems

Many system functions, particularly those related to the Planning and Data Processing Subsystems (PDPS), are dependent on correct registration and functioning of the science algorithms, or Product Generation Executives (PGEs). The initiation of successful PDPS functions is dependent on the ability to create and activate production plans. The correct functioning of PGEs is in turn dependent on the functioning of SDSRV and STMGT in data insertion and archiving, as well as related communications. If there is a production planning problem, planning personnel have some initial troubleshooting that they can do using the guidance in **Troubleshooting Production Planning Problems** (Production Planning and Processing Lesson, Document 625-EMD-006). Production personnel may apply guidance for **Troubleshooting Processing Problems** (Production Planning and Processing Lesson, Document 625-EMD-006). If they are unable to resolve the problem, additional troubleshooting may be necessary. Troubleshooting PGE problems typically includes inserting a small file to check that data insertion and archiving functions are working, as well as checking PDPS mount points and then examining PDPS and SDSRV logs to search for evidence of communications failure during PGE execution. It may also be helpful to have PDPS personnel create and activate a plan using sample PGEs such as ETS and ACT. Use the following procedure to recover from problems with plan creation or activation and the running of PGEs.

Recovering from PDPS Plan Creation/Activation and PGE Problems (Procedure 10.1)

1 Examine the server logs to determine if PDPS communicated with SDSRV during the PGE execution associated with the problem, using the procedure for **Checking Server Log Files (Procedure 2.1)** (previous section of this lesson).

- On the host for the Queuing Server (**e0sps04**, **g0sps06**, **l0sps03**, or **n0sps08**), examine **EcDpPrJobMgmtDebug.log** and **EcDpPrDeletionDebug.log**.

- On the host for SDSRV (**e0acs05**, **g0acs03**, **l0acs03**, or **n0acs04**), examine **EcDsScienceDataServerDebug.log**.
- If the logs indicate evidence of communication failure, perform the procedure for **Recovering from a Connectivity Problem (Procedure 3.1)** (previous section of this lesson); if the log suggests a database access failure, perform the procedure for **Recovering from a Database Access Problem (Procedure 4.1)** (previous section of this lesson).

2 Ensure that PDPS personnel have thoroughly reviewed the problem using procedures for **Troubleshooting Processing Problems** [refer to Production Planning and Processing Lesson (Document 625-EMD-006)].

- When a PGE binary fails, a failed PGE granule is stored in the archive; this is essentially a tar file of the PDPS run-time directory. It may be helpful to retrieve the relevant failed PGE granule from the archive and examine the information for indications of the problem. If there is indication of a problem with the PGE binary, it may be necessary to refer the problem to SSI&T personnel for solution.

3 Insert a small file using the DSS Driver.

- The DSS driver is used for inserting data into the data server (archive), performing acquires from the archive, and/or searching the archive for granules. It is launched by running a script, **EcTsDsClientDriverStart**, on the SDSRV host (**e0acs05**, **g0acs03**, **l0acs03**, or **n0acs04**). Then you follow prompts on the screen to specify data insert, main data type, any accompanying metadata, and filename(s).

4 Ensure that the insert into the SDSRV database and Archive worked and that the insertion is reflected in the Archive and Inventory Databases, and perform any necessary corrective actions if the insertion and associated triggers did not work.

- Use the procedure for **Recovering from Granule Insertion Problems (Procedure 7.1)** (previous section of this lesson).

5 Determine if the Planning and Data Processing Subsystems (PDPS) mount point is visible on the SDSRV host (**e0acs05**, **g0acs03**, **l0acs03**, or **n0acs04**) and on the Archive Server host (**e0drg01**, **g0drg01**, **l0drg1**, or **n0drg01**) by following the procedure for **Recovering from a Missing Mount Point Problem (Procedure 5.1)** (previous section of this lesson).

6 To check out PDPS functions, have planning personnel create and activate a plan to run ACT and ETS PGEs, using applicable procedures to create production requests [refer to the procedure **Create a New Production Request Using the Production Request Editor GUI** (Document 611-EMD-001, Section 13.2.3)] and to create and activate the plan [refer to the procedure **Create a New Production Plan** (Document 611-EMD-001, Section 13.4.2)].

- Ensure that the necessary input and static files are present in SDSRV, using as guidance Steps 2, 3, and 4 of the procedure for **Recovering from Granule Insertion Problems (Procedure 7.1)** (previous section of this lesson).

- Ensure that the necessary ESDTs (e.g., for AST_09T, AST_08, and AST_05) are installed, using applicable procedures [e.g., **Recovering from Problems with ESDTs, DAP Insertion, SSI&T (Procedure12.1)** (subsequent section of this lesson) and **Adding ESDTs** and **Updating ESDTs** (Document 611-EMD-001, Sections 26.10.3 and 26.10.4)].
- Ensure that there is a subscription for AST_08 FtpPush entered into NSSRV, using appropriate procedures [e.g., **Use the Spatial Subscription Server GUI to Add a Subscription to the NBSRV Database** (Document 611-EMD-001, Section 19.4.5)].

7 On the Queuing Server host (**e0sps04**, **g0sps06**, or **l0sps03**) or the Science Processor host (**e0spg11**, **g0spg15**, or **l0spg11**), check the PDPS run-time directories, as follows:

- Type **cd /usr/ecs/<*mode*>/CUSTOM/pdps/<*processor_host*>/data/DpPrRm/<*processor_host*>_disk/<*PGE_directory*>/<*PGE#version_no.*>** and the press the **Return/Enter** key.
- List the files (i.e., type **ls -al | more** and then press the **Return/Enter** key). ***Note***: At the completion of a successful or unsuccessful PGE run, its run-time directory is cleaned up. Therefore, you will only see run-time directories for PGEs that are currently running or for which execution has been stopped. If execution is stopped, conduct troubleshooting in accordance with procedures for **Responding to Hanging of the Processing System** [refer to Production Planning and Processing Lesson (Document 625-EMD-006)].

8 Determine if the user in the subscription received an e-mail message concerning the FtpPush [refer to Step 13 of the procedure for **Recovering from Granule Insertion Problems (Procedure 7.1)** (previous section of this lesson)].

9 Determine if the files were pushed to the correct directory [refer to the procedure for **Recovering from Data Distribution Problems (Procedure15.1)** (subsequent section of this lesson)].

10 Execute *EcCsIdPingServers* and note machines with which DDIST communicates from ***x*0dis02** [refer to the procedure for **Using EcCsIdPingServers to determine server status** (previous section of this lesson)].

- It may be necessary to reboot any machine(s) from which there is no response [refer to the procedure to **Perform Warm Startup by Subsystem** (Document 611-EMD-001, Section 3.2.1.3)].

Recovering from QA Monitor Problems

The Quality Assurance (QA) Monitor GUI is used to record the results of a QA check on a science data product, updating the QA flag in the metadata. This function is dependent on the presence in SDSRV of the data to be evaluated for quality. The operator uses the tool to execute

a query of SDSRV to locate and retrieve the data (and/or its production history), and to return the results of the QA assessment in a metadata update. Some problems may result in the display of user messages; these are identified in Appendix A of the *Release 7.10 Operations Tools Manual for the EMD Project* (Document 609-EMD-001) along with potential impacts, causes, and corrective actions. Most of the QA Monitor user messages result from problems with system communications or run-time errors, and the proposed corrective actions for the operator are often to exit the GUI and try again later. For other problems related to the system query, use the following procedure.

Recovering from QA Monitor Problems (Procedure 11.1)

1 Ensure that the data on which to perform QA are in the SDSRV.

- On the host for the Archive Server (***x*0drg01**), type the directory change command **cd /dss_stk1/<*mode*>/<*data_type_directory*>** and then press the **Return/Enter** key.
  - The prompt indicates change to the **/dss_stk1/<*mode*>/<*data_type_directory*>** directory.
- Type **ls -al | grep "<*date*>"** where **"<*date*>"** is a three-letter abbreviation for the month followed by a number indicating the day (e.g., **"Apr 21"**), and then press the **Return/Enter** key.
  - A list of files is displayed, showing date and time of entry for each.
  - If the desired file is displayed in the list, go to Step 2.
  - If the desired file is not displayed, have the inserted again (e.g., from processing). If this succeeds (i.e., the file is now listed), go to Step 2; otherwise, have the Archive Manager conduct the procedure for **Recovering from Failure to Store or Retrieve Data** (Document 611-EMD-001, Section 17.7.2).

2 On the host for SDSRV (e.g., **e0acs05**, **g0acs03**, **l0acs03**, **n0acs04**), examine the SDSRV logs (i.e., **EcDsScienceDataServer.ALOG**, **EcDsScienceDataServerDebug.log**). Use the procedure for **Checking Server Log Files (Procedure 2.2)** (previous section of this lesson) and look for evidence that the data query from the QA Monitor GUI was successfully received.

- If the log shows that SDSRV received the query, go to Step 3.
- If there is no entry indicating the query, log in to the host for the QA Monitor GUI (e.g., **e0pls03**, **g0pls01**, **l0pls02**, **n0pls02**) and examine the QA Monitor GUI logs (i.e., **EcDpPrQaMonitorGUI.ALOG**, **EcDpPrQaMonitorDebug.log**). Use the procedure for **Checking Server Log Files (Procedure 2.2)** (previous section of this lesson) and look for evidence of a communications failure. If necessary, perform the procedure **Recovering from a Connectivity Problem (Procedure 3.1)** (previous section of this lesson).

3 On the host for the QA Monitor GUI (e.g., **e0pls03**, **g0pls01**, **l0pls02**, **n0pls02**), examine the QA Monitor GUI logs (i.e., **EcDpPrQaMonitorGUI.ALOG**, **EcDpPrQaMonitor**

Debug.log). Use the procedure for **Checking Server Log Files (Procedure 2.2)** (previous section of this lesson) and look for evidence that the query results were returned from SDSRV.

- If the log shows that the query was not returned, log in to the host for SDSRV (e.g., **e0acs05**, **g0acs03**, **l0acs03**, **n0acs04**) and examine the SDSRV logs (i.e., **EcDsScienceDataServer.ALOG**, **EcDsScienceDataServerDebug.log**). Use the procedure for **Checking Server Log Files (Procedure 2.2)** (previous section of this lesson) and look for evidence of a communications failure. If necessary, perform the procedure **Recovering from a Connectivity Problem (Procedure 3.1)** (previous section of this lesson).

Recovering from Problems with ESDTs or SSI&T

Each collection (of a type of data) is described by an Earth Science Data Type (ESDT), made known to the system by an ESDT descriptor file and associated software code that is built into the Data Server's dynamic link library (DLL) to perform the services. The ESDT descriptor is composed of sections containing the following information:

- Collection level metadata attributes with values contained in the descriptor.
- Granule level metadata attributes whose values are supplied primarily by the Product Generation Executives (PGEs) during runtime.
- Valid values and ranges for the attributes.
- List of services for the data and events that trigger responses throughout the system.

The ESDTs for all data collections to be input to or output from the PGEs must be built and registered in data server software before any of the PGEs can be run under the automated processing system. Any corruption or other problem with an ESDT descriptor or related files may cause degradation or disruption of system functioning.

One type of data with which Science Software Integration and Test (SSI&T) personnel work is Delivered Algorithm Packages (DAPs), the means by which the system receives new Science Software. The insertion of a DAP is dependent on an appropriate ESDT being installed, but otherwise, the Ingest and insertion of DAPs, and the handling of DAP acquires for SSI&T, share features with other insertions and acquires. Accordingly, troubleshooting of problems with DAP insertion and acquires follows procedures similar to those for troubleshooting of other insertions and acquires.

Tools and GUIs for Science Software Integration and Test (SSI&T) are essential for the testing of new science algorithms and for preparing them for integration into the system operating environment. If these tools and GUIs are not properly installed, or if the system cannot perform inserts and FtpPush functions, SSI&T will be prevented or degraded. The SSI&T process entails testing new PGEs for data processing, and therefore many SSI&T problems are problems with

PGEs. Accordingly, useful guidance may be found in troubleshooting procedures applicable to processing problems (refer to **Troubleshooting Processing Problems** in the Production Planning and Processing Lesson, Document 625-EMD-006) or problems with PGEs (refer to **Recovering from PDPS Plan Creation/Activation and PGE Problems (Procedure 10.1)**, previous section of this lesson). If these approaches do not readily resolve the problem, the following procedure may help ensure that the relevant software components are properly installed, DAPs can be inserted or acquired, and pushes from SDSRV are working to support SSI&T.

Recovering from Problems with ESDTs or SSI&T (Procedure 12.1)

1 Check to ensure that involved subsystems and their computer software configuration items (CSCIs) are correctly installed and that the associated servers are functioning.

- Launch the Science Data Server (SDSRV) GUI and review the ESDTs listed on the **Data Types** tab in the **Names** column to ensure that there is an ESDT for the data to be inserted (e.g., via Ingest, Processing, or other insertion). Use appropriate procedures (e.g., from Document 611-EMD-001, Section 26.10.1, **Inspecting ESDTs**). If the needed ESDT is not available, it may be necessary to install or re-install it using appropriate procedures (e.g., from Document 611-EMD-001, Section 26.10.3, **Adding ESDTs**).
- Launch the Spatial Subscription Server (NBSRV) GUI and review the registered **Events** to ensure that the event associated with the problem is registered. Use appropriate procedures (e.g., from Document 611-EMD-001, Section 19.4.4, **Use the Spatial Subscription Server GUI to List and View Subscriptions in the NBSRV Database**). If the event is not registered, it may be necessary to install or re-install the associated ESDT using appropriate procedures (e.g., from Document 611-EMD-001, Section 26.10.3, **Adding ESDTs**).
- At the host for DDICT (e.g., **e0ins01**, **g0ins02**, **l0ins02**, **n0ins02**), launch the ECS Assistant and check for the presence of installed components and functioning of related servers for DDICT. Use appropriate procedures (e.g., from a previous section of this lesson, **Starting ECS Assistant**, and **Using the ECS Assistant Server Monitor**). If **EcDmDictServer** is not "up," restart the server(s) using appropriate procedures [e.g., see the procedure to **Check the Status of Hosts and Servers (Procedure 1.1)**].
- Ensure that Data Processing Subsystem and its computer software configuration items (CSCIs) are correctly installed [i.e., use ECS Assistant on the AIT Workstation (e.g., **e0ais02**, **g0ais05**, **l0ais09**) to check installed components for the Algorithm Integration and Test Tools; refer to procedure **Starting ECS Assistant** (Document 611-EMD-001, Section 7.2.2.1)].
- If the items are not correctly installed, it may be necessary to reinstall the software; e.g., refer to the Science Software Integration and Test Lesson, Document 625-EMD-016).

2 Ensure the registration of events for any ESDT associated with the problem.

- On the SDSRV GUI, locate the ESDT either by scrolling through the list, or by typing all or part of the event name in the **Find** field and then clicking on the **Find** button. Click on the ESDT, and then click on the **View** button to display the **Descriptor Information** for the ESDT. In the **Descriptor Information** window, scroll to the end of the displayed information and review the last few lines to see the event data (**GROUP=EVENT**). Typically, there will be information for three types of events:
  - Insert.
  - Delete.
  - Update Metadata.
- You may also check for the presence of events by checking or asking the Database Administrator to check for their presence in the Science Data Server Database on the SDSRV database host (**g0acg01**, **l0acg02**, **n0acg01**, **e0acg01**).
- If no events are listed for the ESDT associated with the problem, or there seems to be a problem with event information available through the SDSRV GUI, it may be necessary to re-install the ESDT, using appropriate procedures (e.g., from Document 611-EMD-001, Section 26.10.3, **Adding ESDTs**).

3 Review the SDSRV log files to determine if there were any errors associated with communications between SDSRV and SBSRV, or DDICT.

- Use appropriate procedures [e.g., **Checking Server Log Files (Procedure 2.1)** (previous section of this lesson)]. If there are indications of communication failure, check for connection problems [refer to **Recovering from a Connectivity Problem (Procedure 3.1)** (previous section of this lesson)].

4 Ensure that it is possible to insert into the SDSRV database and Archive and that the insertion is reflected in the Archive and Inventory Databases, and perform any necessary corrective actions if the insertion did not work.

- Use the procedure for **Recovering from Granule Insertion Problems (Procedure 7.1)** (previous section of this lesson).

5 Ensure the presence of the relevant data in the archive and that SDSRV can perform FtpPushes.

- Use the procedure for **Recovering from Data Distribution Problems (Procedure 15.1)** (subsequent section of this lesson).

Recovering from Problems with Data Search and Order

Data search functions are critical for user access to ECS collections. Data search is dependent on data being present in the Archive and reflected in the inventory, either as a result of Ingest operations or as products of data processing.

Data search functions, as well as other system operations, rely on correct functioning of the V0 Gateway (V0GTWY) and the Data Dictionary (DDICT), and on up-to-date mapping of valid attributes and keywords for the collections to be searched. It is therefore important to make certain that there is connectivity between V0GTWY and DDICT, and that they are able to communicate.

Data order by a registered user must function correctly if products are to be distributed. Data order is dependent on successful data search. In addition, the Order Manager Server must function to direct the order to the appropriate order fulfillment service (SDSRV or PDS), SDSRV must be able to support distribution by FtpPull and FtpPush, and the account and any directory to be used by Ftp server must be valid. Use the following procedure to recover from problems with functions for data search, including connectivity between the V0GTWY and DDICT, and data order by a registered user.

Recovering from Problems with Data Search and Order (Procedure 13.1)

1 Ensure that appropriate data have been ingested and/or produced and are in SDSRV.

- On the host for the Archive Server (***x*0drg01** [or ***x*0drg0*n***]), type the directory change command **cd /dss_stk1/<*mode*>/<*data_type_directory*>** and then press the **Return/Enter** key.
  - The prompt indicates change to the **/dss_stk1/<*mode*>/<*data_type_directory*>** directory.
- Type **ls -al | grep <*granuleUR*>** and then press the **Return/Enter** key.
  - If the appropriate file(s) are displayed in the list, with date and time of entry for each, go to Step 2.
  - If appropriate file(s) are not displayed, have the file(s) inserted again (e.g., from Ingest or Processing). If this succeeds (i.e., file(s) are now listed), go to Step 2; otherwise, have the Archive Manager conduct the procedure for **Recovering from Failure to Store or Retrieve Data** (Document 611-EMD-001, Section 17.7.2).

2 On the host for SDSRV (e.g., **e0acs05**, **g0acs03**, **l0acs03**, **n0acs04**), examine **EcDsScienceDataServerDebug.log** for evidence of problems with search activity.

- If there is an error message indicating "Archive center not available . . .," it may be necessary to "Update All Collections" using the button for that update on the Map Attributes tab of the Data Dictionary Maintenance Tool.

3 On the V0GTWY host (i.e., ***x*0ins02**, where ***x*** is **g** for GSFC, **l** for LaRC, **e** for LP DAAC, or **n** for NSIDC), type **cd /usr/ecs/<*mode*>/CUSTOM/logs**, and then press the **Return/Enter** key.

- The prompt indicates a change to directory **/usr/ecs/<*mode*>/CUSTOM/logs**.

4 To view the V0GTWY debug log, type **more EcDmV0ToEcsGatewayDebug.log** and then press the **Return/Enter** key. [This procedure uses the **more** command, but any UNIX editor or visualizing command (e.g., **vi**, **pg**, **view**, **tail**) may be used to view the file. If the debug level is set less than 3, the log may not register all information.]

- This displays the file contents. Near the beginning, with date and time reflecting server start-up, the file should contain a **SQL SELECT** entry similar to:

  07/18/01 16:11:40: Thread ID : 1 : ~~~SQL STATEMENT IS: SELECT distinct \t1.collectionId,t1.siteId,t1.ShortName, upper(t4.keywordName), t1.VersionID,t1.ArchiveCenter FROM DmDdECSCollection t1, DmDdInfoMgrCollXref t2, DmDdEquivalentAttributes t3, DmDdStringDomain t4, DmDdAttributeXref t5 WHERE t1.collectionId = t2.collectionId AND t1.siteId = t2.siteId AND t2.infoMgrName = "[PVC:DSSDSRV]" AND t5.siteId = t1.siteId AND t5.collectionId = t1.collectionId AND t5.collectionIdRef=t3.collectionId AND t5.siteIdRef=t3.siteId AND t5.attributeIdRef=t3.attributeId AND t4.collectionId=t3.collectionId AND t4.siteId=t3.siteId AND t4.attributeId=t3.attributeId AND t3.equivalentAttributeName= "DATASET_ID"

  and, further down in the output, still with date and time reflecting server start-up, the file should contain an entry similar to the following:

  7/18/01 16:11:44: Thread ID : 1 : **** End of Monitoring *******.**

- If the start-up information is correct, it indicates that the V0GTWY is using a valid isql query; go to Step 5.

- If the log does not display start-up information, there may be a problem with connectivity; refer to the procedure for **Recovering from a Connectivity Problem (Procedure 3.1)** (previous section of this lesson).

- If the log displays only part of the information (e.g., does not contain an entry for **End of Monitoring**), there may be a problem with port assignment. It may be necessary to re-assign ports to eliminate a conflict and then stop and restart the V0GTWY server. To stop the server, kill its process (i.e., if necessary to identify the process ID, execute the command **ps –ef | grep EcDm** and in the returned listing note the process ID for the application **EcDmV0ToEcsGatewayServer** in the mode of interest; then execute the command **kill –15 <*processID*>).** Then restart the server as specified in step 4 of the procedure **Check the Status of Hosts and Servers (Procedure 1.1)** described in a previous section of this lesson.

5 Ensure that there is compatibility between the collection mapping database being used by the ECS Data Dictionary and the EOS Data Gateway Web Client.

- Contact the EOSDIS V0 Information Management System (IMS) to ensure that any recently exported ECS valids have successfully passed their two-week valids update cycle and that the changes are currently operational. If the changes are not operational, it will be necessary to re-initiate the data search after the V0 IMS has implemented the changes.

6 To begin a check on functions for data order by a registered user, use the Data Distribution (DDIST) GUI to determine if DDIST is handling a request for the data and to monitor the progress of the request [refer to the procedure for **Monitor/Control Data Distribution Requests** (Document 611-EMD-001, Section 18.2.3)].

- The DDIST GUI may provide error messages to which the Distribution Technician can respond [refer to Appendix A of the *Release 7.10 Operations Tools Manual for the EMD Project* (Document 609-EMD-001)], and there are actions for troubleshooting data distribution problems that the Archive and/or Distribution personnel can perform [refer to the procedure for **Recovering from a Data Distribution Failure** (Data Distribution lesson, Document 625-EMD-009)].

7 Access a terminal window logged in to a host (e.g., the Operations Workstation or Interface Server 02) that has access to the Netscape web browser and launch the Order Manager GUI [refer to the procedure for **Launch the Order Manager GUI** (Document 611-EMD-001, Section 18.5.1)] and look for the data request among the listed distribution requests being handled by the Order Manager [refer to the procedure to **Monitor/Control Distribution Request Information on the OM GUI** (Document 611-EMD-001, Section 18.5.3).

- The Distribution Requests screen of the OM GUI should display a request reflecting the ordered data. If the request is on hold (i.e., its status is **Operator Intervention**) or it was terminated, it may be necessary to view and respond to the intervention [refer to the procedure to **View Open Intervention Information on the OM GUI** (Document 611-EMD-001, Section 18.5.2)].

8 On the DDIST host (e.g., **e0dis02**, **g0dis02**, **l0dis02**, **n0dis02**), examine the log **EcDsDistributionServerDebug.log** to determine if an e-mail notification was sent to the user identified in the subscription; the output should be similar to the following:

```
05/06/99 12:52:41: Media::SendNotificationMessage.(myNotify,mySite,myConfig-
>GetMode(),mailAddress): (, , TS1, cmts1@t1ins02u.ecs.nasa.gov
Media::SendNotificationMessage: Getting e-mail address from configuration file.
05/06/99 12:52:41: DdDsDoneQueue::Thread Was marked SyncDone and Signaled.
RequestID= 125125210220554
```

- The timing of this step may depend on the type of distribution being requested. If it is an FtpPull, the e-mail notification of data availability occurs prior to the pull attempt. If it is an FtpPush or a media distribution, the e-mail notification occurs after the data are shipped.

9 Examine the server logs to determine where the order failed, using the procedure for **Checking Server Log Files (Procedure 2.1)** (previous section of this lesson). Check the **EcDmV0ToECSGatewayDebug.log** on the V0GTWY host (e.g., **e0ins02**, **g0ins02**, **l0ins02**, **n0ins02**), **EcDsStFtpServerDebug.log**, **EcDsStArchiveServerDebug.log**, **EcDsStStagingDiskServerDebug.log**, and **EcDsStCacheManagerServerDebug.log** on the STMGT host (e.g., **e0drg01**, **g0drg01**, **l0drg01**, **n0drg01**), **EcOmOrderManager.ALOG** and the **EcDsScienceDataServerDebug.log** on the OM Server/SDSRV host (e.g., **e0acs05**, **g0acs03**, **l0acs03**, **n0acs04**), and **EcDsDistributionServerDebug.log** on the DDIST host (e.g., **e0dis02**, **g0dis02**, **l0dis02**, **n0dis02**). Also check related .ALOG files.

- Examine the OM Server .ALOG (**EcOmOrderManager.ALOG**) for evidence of errors related to the request. Most of the entries in the log should be time-stamped indications of threads running, similar to the following:

PID : 7297:Thread ID : 24 : MsgLink :0 meaningfulname :FAAF
Msg: OmServer::CheckConfigThread running File=OmServer.C at line 612 Priority: 3 Time : 03/01/03 06:24:40
PID : 7297:Thread ID : 24 : MsgLink :0 meaningfulname :FAAF
Msg: OmServer::CheckConfigThread running File=OmServer.C at line 612 Priority: 3 Time : 03/01/03 06:24:41
PID : 7297:Thread ID : 23 : MsgLink :0 meaningfulname :FAAF
Msg: OmServer::CheckQueuesThread running File=OmServer.C at line 646 Priority: 3 Time : 03/01/03 06:24:42
PID : 7297:Thread ID : 24 : MsgLink :0 meaningfulname :FAAF
Msg: OmServer::CheckConfigThread running File=OmServer.C at line 612 Priority: 3 Time : 03/01/03 06:24:42

However, if there is a database error, there will be a message concerning the problem, and it is possible to **grep** on **Sybase** until you find an entry around the time of the problem. Such a message may be similar to the following:

PID : 7297:Thread ID : 24 : MsgLink :0 meaningfulname :msg1
Msg: DsDb::SybaseError<SQL Server has run out of LOCKS. Re-run your command when there are fewer active users, or contact a user with System Administrator (SA) role to reconfigure SQL Server with more LOCKS.
> at OmDsDbInterface.C : 1089 Priority: 2 Time : 03/01/03 08:44:36
PID : 7297:Thread ID : 24 : MsgLink :0 meaningfulname :BDBC
Msg: OmSrDbPool: Bouncing Database Connection File=OmSrDbPool.C at line 302 Priority: 2 Time : 03/01/03 08:44:36
PID : 7297:Thread ID : 24 : MsgLink :0 meaningfulname :OmDsDbInterface::CleanUpConn()
Msg: Disconnected from server: <p0acg05_srvr> Priority: 2 Time : 03/01/03 08:44:36
PID : 7297:Thread ID : 23 : MsgLink :0 meaningfulname :FAAF
Msg: OmServer::CheckQueuesThread running File=OmServer.C at line 646 Priority: 3 Time : 03/01/03 08:44:38
PID : 7297:Thread ID : 24 : MsgLink :0 meaningfulname :OmDsDbInterface::Connect()
Msg: Connected to server: <p0acg05_srvr> Priority: 2 Time : 03/01/03 08:44:38

or

PID : 7297:Thread ID : 25 : MsgLink :0 meaningfulname :msg1

Msg: DsDb::SybaseError<ct_connect(): network packet layer: internal net library error: Net-Library operation terminated due to disconnect> at OmDsDbInterface.C : 602 Priority: 2 Time : 03/01/03 10:02:45

PID : 7297:Thread ID : 25 : MsgLink :0 meaningfulname :msg1

Msg: DsDb::SybaseError<connect error> at OmDsDbInterface.C : 603 Priority: 2 Time : 03/01/03 10:02:45

It may also be instructive to **grep** on **FFAIL** for messages around the time of the problem that may be similar to the following:

PID : 7297:Thread ID : 27 : MsgLink :0 meaningfulname :FFAIL

Msg: Error FetchQueryResult with detail=2 File=OmSrDbInterface.C at line 2672 Priority: 2 Time : 02/26/03 16:54:52

- Look specifically at the SDSRV .ALOG (**EcDsScienceDataServer.ALOG**) for evidence that the request was received. You should see information similar to the following for FtpPull:

Priority: 0 Time : 05/18/99 10:44:55

PID : 5722:MsgLink :0 meaningfulname :DsSrSessionExecuteRequestStart0

Msg: Request ID 3c82feee-0d30-11d3-a305-c676e82eaa77:????: executing:

DsSrRequest (1): DsShSciRequestImp: [svr: ScienceDS, pri: NORMAL domain:0:]: (DsShSciCommandImp: service: ACQUIRE num parameters: 2 category: Parameters are:- UnnamedPL[DDISTMEDIATYPE(FtpPull) ECSUSERPROFILE(L7CPF-Pull)]

DISTRIBUTION)

or the following for FtpPush (note that information about FTP user is included):

Priority: 0 Time : 05/18/99 10:48:10

PID : 5722:MsgLink :0 meaningfulname :DsSrSessionExecuteRequestStart0

Msg: Request ID b0f09aac-0d30-11d3-a305-c676e82eaa77:????: executing:

DsSrRequest (1): DsShSciRequestImp: [svr: ScienceDS, pri: NORMAL domain:0:]: (DsShSciCommandImp: service: ACQUIRE num parameters: 7 category: Parameters are:- UnnamedPL[DDISTMEDIATYPE(FtpPush) DDISTMEDIAFMT(FILEFORMAT) ECSUSERPROFILE(L7CPF-Push) FTPUSER(cmshared) FTPPASSWORD(********) FTPHOST(t1acs03) FTPPUSHDEST(/home/bmyer/TS1_data)]

DISTRIBUTION)

- ***Note***: It is also possible to examine the System Requests displayed on the Science Data Server GUI to determine if SDSRV received the acquire request from the Order Manager or from the PDS.

- If appropriate entries are missing, or there is other evidence of a communications disruption or failure, perform the procedure **Recovering from a Connectivity Problem (Procedure 3.1)** (previous section of this lesson).

10 Determine if there are data in the staging area, performing any corrective actions necessary.

- Use Steps 4 through 9 of the procedure for **Handling an Acquire Failure (Procedure 8.1)** (previous section of this lesson).

11 Execute *EcCsIdPingServers* and note machines with which DDIST communicates from ***x*0dis02** [refer to the procedure for **Using EcCsIdPingServers to determine server status** (previous section of this lesson)].

- It may be necessary to reboot any machine(s) from which there is no response [refer to the procedure to **Perform Warm Startup by Subsystem** (Document 611-EMD-001, Section 3.2.1.3)].

12 On the System Management Support Subsystem (MSS) host (e.g., **e0mss21**, **g0mss21**, **l0mss21**, **n0mss21**), launch the ECS Order Tracking GUI [refer to the procedure **Launch the ECS Order Tracking GUI** (Document 611-EMD-001, Section 19.5.1)] and determine if the order is reflected in MSS order tracking [refer to the procedure **Use the ECS Order Tracking GUI to Find and Review a User's Order and Request Information** (Document 611-EMD-001, Section 19.5.2)].

- If the ECS Order Tracking GUI does not reflect the order, it may be instructive to examine the Order Tracking database (Database Administrator function) by logging into Sybase on the relevant MSS host [use procedure similar to steps 4 and 5 of **Recovering from a Subscription Server Problem (Procedure 6.1)** (previous section of this lesson)] and then selecting the User Name.
- If the order is not reflected in the Order Tracking database, perform the procedure for **Recovery from a Database Access Problem (Procedure 4.1)** (previous section of this lesson).

Recovering from Problems with Data Pool

The Data Pool is a repository of selected granules with associated metadata and, if available, browse granules accessible through use of a web browser or FTP service to search and download by FTP. The Data Pool provides users with a rapid means to obtain granules with associated metadata and any available browse granules. User Services and Science Data Specialists use the Spatial Subscription Server (NBSRV) GUI to create subscriptions for inserting data into the Data Pool and to perform other tasks necessary to manage the Data Pool. Archive and/or engineering support personnel execute functions for Data Pool monitoring, maintenance, and support.

Typically, the event that triggers a Data Pool insert subscription is the ingest into the archive of the data specified in the subscription. Therefore, a first check for Data Pool function is to determine if the ingest of data specified in a Data Pool insert subscription results in the availability of that data and/or its metadata in the Data Pool. This check may be done using the Data Pool Web Access tool or using FTP to determine if the data and/or metadata appear in the

Data Pool. If the data and/or metadata fail to make it into the Data Pool, check the debug log for the NBSRV Action Driver entries around the time of the ingest to determine whether the Data Pool Insert Utility (DPIU) process was initiated and whether there was an associated database identifier (dbId) dispatched. If the DPIU process was not initiated, it may indicate a problem with the subscription (refer to the procedure for **Recovering from a Subscription Server/NBSRV Problem**, previous section of this lesson).

If the subscription seems to be working and the Action Driver debug log indicates that the DPIU process was initiated, then check the DPIU log for indication of successful Data Pool insert. The DPIU log may indicate problems with file access (refer to the procedure for **Recovering from a Missing Mount Point Problem**, previous section of this lesson) or database access (refer to the procedure for **Recovering from a Database Access Problem**, previous section of this lesson). If the DPIU log reflects successful Data Pool insert but there is still a problem (i.e., the data and/or metadata do not appear in the Data Pool), then it is appropriate to submit a Trouble Ticket.

If the data and/or metadata appear in the Data Pool, download should be possible, using the Data Pool Web Access tool or FTP service. If download is possible, the system should be working properly. If not, then you should check the debug log file for the FTP server and/or the Web server for potential problems with communication. If the log(s) reflect communications problems, refer to the procedure for **Recovering from a Connectivity Problem**, previous section of this lesson). If the log(s) reflect successful download activity, but there is still a problem with the download, it is appropriate to submit a Trouble Ticket.

Use the following procedure to recover from problems with Data Pool.

Recovering from Problems with Data Pool

1 To determine whether a subscription for Data Pool insert works properly to have ingested data and/or metadata inserted into the Data Pool, check the Data Pool for the presence of the data and/or metadata after ingest of appropriate data (in a system check-out, it may be appropriate to ingest an appropriate granule as a test). Use the Data Pool Web Access tool or FTP service to check for the presence of the data and/or metadata [refer to the procedure **Locate and Download Data from the Data Pool using the Data Pool Web Access** (Document 611-EMD-001, Section 19.3.2)].

- If the data and/or metadata are not available in the Data Pool, continue with Step 2. If they are available in the Data Pool, go to Step 4.

2 To check the debug log for the NBSRV Action Driver, log into the host for the NBSRV Action Driver (e.g., e0acg01, g0acg01, l0acg01, n0acg01) and review the debug log for the NBSRV Action Driver (**EcDlActionDriverDebug.log**) (refer to procedure for **Checking Server Log Files**, previous section of this lesson).

- Around the time of the ingest, you should see evidence of the initiation of a Data Pool Insert Utility (DPIU) process and the dispatch of an associated database ID. The log entries should be similar to the following:

```
02/21/02 12:56:10:  Thread ID : 65552 : ENTRY:
DlAdServer::TryDispatchQueuedActions
02/21/02 12:56:10: Starting DPIU Process for dbId=2011046208
02/21/02 12:56:10:  Thread ID : 65552 : TDQA: Dispatched incache
dbId=2011046208 myMaxInCache=20 currentlyInCache=13

02/21/02 12:56:10: Starting DPIU Process for dbId=2011046210
02/21/02 12:56:10:  Thread ID : 65552 : TDQA: Dispatched incache
dbId=2011046210 myMaxInCache=20 currentlyInCache=14

02/21/02 12:56:10: Starting DPIU Process for dbId=2011046213
02/21/02 12:56:10:  Thread ID : 65552 : TDQA: Dispatched incache
dbId=2011046213 myMaxInCache=20 currentlyInCache=15

02/21/02 12:56:10: Starting DPIU Process for dbId=2011046215
02/21/02 12:56:10:  Thread ID : 65552 : TDQA: Dispatched incache
dbId=2011046215 myMaxInCache=20 currentlyInCache=16

02/21/02 12:56:10: Starting DPIU Process for dbId=2011046216
02/21/02 12:56:10:  Thread ID : 65552 : TDQA: Dispatched incache
dbId=2011046216 myMaxInCache=20 currentlyInCache=17

02/21/02 12:56:10: Starting DPIU Process for dbId=2011046233
02/21/02 12:56:10:  Thread ID : 65552 : TDQA: Dispatched incache
dbId=2011046233 myMaxInCache=20 currentlyInCache=18

02/21/02 12:56:10: Starting DPIU Process for dbId=2011046240
02/21/02 12:56:10:  Thread ID : 65552 : TDQA: Dispatched incache
dbId=2011046240 myMaxInCache=20 currentlyInCache=19

02/21/02 12:56:10: Starting DPIU Process for dbId=2011046241
02/21/02 12:56:10:  Thread ID : 65552 : TDQA: Dispatched incache
dbId=2011046241 myMaxInCache=20 currentlyInCache=20
```

  and there should also be log entry information indicating that the data and/or metadata, identified by shortname and version, are on the action list. The information should be in format similar to the following (note the dbid information corresponding to the prior information to permit confirmation that a DPIU action was initiated for a specific data type and version):

```
ORIGINAL COMMAND LINE: -pid 9338943 -mode OPS -shortname MOD021KM -
version 1 -dbid 2011046208 -priority 254 -period 30 -mdonly n -
incache Y -retry 1 -ppid 9333510 -actionlist (2011046208,1057) -pid
9333909
ORIGINAL COMMAND LINE: -pid 9341378 -mode OPS -shortname MOD02OBC -
version 1 -dbid 2011046213 -priority 254 -period 30 -mdonly n -
incache Y -retry 1 -ppid 9333510 -actionlist (2011046213,1059) -pid
9182632
ORIGINAL COMMAND LINE: -pid 9336714 -mode OPS -shortname MOD021KM -
version 1 -dbid 2011046215 -priority 254 -period 30 -mdonly n -
incache Y -retry 1 -ppid 9333510 -actionlist (2011046215,1060) -pid
9321907
```

Note: The foregoing examples are for actions related to "incache" data. If the actions are not completed before the addressed data are removed from cache, the action may be converted to a "NotInCache" process. In that case, you may see log entries such as the following:

```
02/21/02 13:31:54:  Terminating proc for dbId=2011452751
02/21/02 13:31:54:  Thread ID : 65537 : ENTRY:
DlAdServer::SigChildHandler
02/21/02 13:31:54: DPIU Process exited for dbId=2011452751
pid=9368327 exitStatus =FAILED_RETRY
02/21/02 13:31:54:  Thread ID : 65552 : ENTRY:
DlAdServer::ChangeToNotInCache dbId=2011452751
02/21/02 13:31:54:  Thread ID : 65552 : ENTRY:
DlAdServer::ActionTerminated pid=9376480
02/21/02 13:31:54:  Thread ID : 65552 : ENTRY:
DlAdServer::MarkActionNotActive pid=9376480

02/21/02 22:26:20:  Thread ID : 65552 : ENTRY:
DlAdServer::TryDispatchQueuedActions
02/21/02 22:26:20: Starting DPIU Process for dbId=2011452751
02/21/02 22:26:20:  Thread ID : 65552 : TDQA: Dispatched NON CACHE
dbId=2011452751 myMaxNotInCache=20 currentlyNotInCache=18

ORIGINAL COMMAND LINE: -pid 9693747 -mode OPS -shortname MOD06_L2 -
version 3 -dbid 2011452751 -priority 254 -period 30 -mdonly n -
incache N -retry 2 -ppid 9333510 -actionlist (2011452751,1920) -pid
9675942
```

- If the log shows evidences of appropriate initiation of the DPIU action, the next step is to check the DPIU log for an associated response (see Step 3).
- If there is no evidence of appropriate DPIU action being initiated, it is appropriate to investigate a possible problem with the subscription (refer to the procedure for **Recovering from a Subscription Server/NBSRV Problem**, previous section of this lesson).

3 To check the log for the DPIU, on the host for the NBSRV Action Driver (e.g., e0acg01, g0acg01, l0acg01, n0acg01), review the log for the Data Pool Insert Utility (**EcDlInsertUtility.log**) (refer to procedure for **Checking Server Log Files**, previous section of this lesson).

- Use the search capability to search the file for the date and approximate time of the problem (e.g., while viewing the file, type ***/date time*** [e.g., **03.12.2002 10:15**] and then press the **Return/Enter** key). The log should reflect activity associated with the insert process, in format similar to the following:

```
[03.12.2002 10:17:54.401][13223943] ElDlInsertUtility ****Started
new dpiu process: Tue Mar 12 10:17:54 EST 2002
[03.12.2002 10:17:55.737][13223943]
DlInsertWorker.createNewInsertProcess for granule: 2012557753
shortname: AST_L1B version: 1 mdflag: n
[03.12.2002 10:17:55.784][13223943] DlInsertWorker STATUS for
DBID: 2012557753 [**** PROCESSING ****]
[03.12.2002 10:17:57.195][13223943] DlGranule.isEligibleForInsert:
mdonly flag is: N
```

```
[03.12.2002 10:17:57.296][13223943] DlGranule.isEligibleForInsert
checked insert eligibility for: 2012557753 : true
[03.12.2002 10:17:57.305][13223943]
DlInsertWorker.copyScienceGranuleToDataPool for granule:
2012557753
[03.12.2002 10:17:57.550][13223943] DlScienceGranule.isInDataPools
returning: false for granule: 2012557753
[03.12.2002 10:17:57.780][13223943]
DlScienceGranules.getCollectionGroup returning: ASTT for granule:
2012557753
[03.12.2002 10:17:58.089][13223943] DlInsertWorker STATUS for
DBID: 2012557753 [**** LOCATING GRANULE FILES ****]
[03.12.2002 10:17:58.274][13223943]
DlScienceGranule.getFileCollection for granule: 2012557753
[03.12.2002 10:17:59.556][13223943] DlGranule.getFileLocations
VOLUME GROUP -- /dss_stk1/OPS/e_astl1 HOST -- p0drg01
[03.12.2002 10:17:59.573][13223943]
DlUtils.isFileInRemoteDirectory: invoking: ls
/dss_stk1/OPS/e_astl1/:SC:AST_L1B.001:2012557753:1.HDF-EOS [HOST]
p0drg01
.
.
.
[03.12.2002 10:18:00.699][13223943] DlUtils.isFileInAmassCache
returned: 1
[03.12.2002 10:18:00.700][13223943] DlInsertWorker STATUS for
DBID: 2012557753 [**** COPYING GRANULES FROM AMASS ****]
[03.12.2002 10:18:01.059][13223943] DlUtils.remoteCopyFile:
invoking: /usr/ecs/OPS/CUSTOM/bin/COM/EcUtCopyExec  "/dss_stk
1/OPS/e_astl1/:SC:AST_L1B.001:2012557753:1.HDF-EOS"
"/datapool/OPS/user/temp/2012557753/L1B-GRN-MgrSwath-
Composite.hdf" 4096 3 [HOST] p0drg01
.
.
.
[03.12.2002 10:18:21.057][13223943] DlInsertWorker STATUS for
DBID: 2012557753 [**** GENERATING XML FILE ****]
[03.12.2002 10:18:59.393][13223943]
DlScienceGranule.getFileCollection for granule: 2012557753 FROM
MEMORY
[03.12.2002 10:18:59.613][13223943]
DlScienceGranule.generateMetadataFile params: dbid: 2012557753 |
fileName: /datapool/
OPS/user/temp/2012557753/L1B-GRN-MgrSwath-Composite.hdf.xml
[03.12.2002 10:19:03.685][13223943]
DlScienceGranule.getFileCollection for granule: 2012557753 FROM
MEMORY
[03.12.2002 10:19:03.686][13223943] DlInsertWorker STATUS for
DBID: 2012557753 [**** MOVING GRANULE TO DATA POOLS ****]
```

- If the log reflects appropriate activity for successful Data Pool insert and there is still a problem, it is appropriate to prepare and submit a Trouble Ticket. If the log does not reflect such activity it is appropriate to investigate possible problems with file access or database access. If the logs indicate file access problems, refer to the procedure **Recovering from a Missing Mount Point Problem (Procedure 5.1)** (previous section of this lesson). If the logs indicate a database access problem, refer

to the procedure **Recovering from a Database Access Problem (Procedure 4.1)** (previous section of this lesson).

4 If the initial check for the success of Data Pool insert showed the data and/or metadata available in the Data Pool and the system is functioning correctly, it should be possible to download the data/metadata. Use the Data Pool Web Access tool or FTP service to attempt the download [refer to the procedure **Locate and Download Data from the Data Pool using the Data Pool Web Access** (Document 611-EMD-001, Section 19.3.2)].

- Successful download indicates that the Data Pool is functioning correctly. If the data and/or metadata cannot be downloaded, continue with Step 5.

5 To check the log for the DataPool FTP Service, log into the host for the FTP Service (e.g., e0dps01, g0dps01, l0dps01, n0dps01).

6 To change to the directory for the SYSLOG, type cd /var/adm and then press the **Return/Enter** key.

- The working directory is changed to /var/adm.

7 To review the SYSLOG, type **view SYSLOG**, and then press the **Return/Enter** key. (*Note*: This procedure is written using the **view** command, but any appropriate file editor or viewing command may be used (e.g., **vi**, **pg**, **more**).

- The window displays the first screen of the contents of the log.
- Use the search capability to search the file for the date and approximate time of the problem (e.g., while viewing the file, type ***/date time*** [e.g., **Mar 15 09:30**] and then press the **Return/Enter** key). The log should reflect activity associated with the download, in format similar to the following example:

```
Mar 15 09:33:48 7T:p0dps01 ftpd[13883902]: connect from
p0fwi09.pvc.ecs.nasa.gov
Mar 15 09:33:48 6D:p0dps01 ftpd[13883902]: connection from
p0fwi09.pvc.ecs.nasa.gov
Mar 15 09:33:49 6E:p0dps01 ftpd[13883902]: ANONYMOUS FTP LOGIN FROM
p0fwi09.pvc.ecs.nasa.gov, mozilla
Mar 15 09:34:55 6D:p0dps01 ftpd[13883902]: get
/MOAT/MOD021KM.003/1999.02.24/MOD021KM.A1999055.0000.003.200207200160
7.hdf.xml = 4392 bytes
```

- To exit the log viewing, type **:q!** and then press the **Return/Enter** key. If the log file does not reflect appropriate download activity it is appropriate to check for potential problems with communication. If the log reflects communications problems, refer to the procedure for **Recovering from a Connectivity Problem**, previous section of this lesson).

8 To check the debug log for the DataPool Web Access Service, log into the appropriate host (e.g., e0mss21, g0 mss21, l0 mss21, n0 mss21) and review the access log for the DataPool Web Service (**EcDlWebAccess.log**) (refer to procedure for **Checking Server Log Files**, previous section of this lesson).

- Use the search capability to search the file for the date and approximate time of the download (e.g., while viewing the file, type ***/date time*** [e.g., **2002.02.14 09:50**] and then press the **Return/Enter** key). The log should reflect activity associated with the download activity, in format similar to the following example:

```
2002.02.14-09:58:42.206/[log]/WARNING:previous attrib = home
2002.02.14-09:58:42.209/[log]/WARNING:action =
"/OPS/drill;jsessionid=qxkypijgx1?attrib=group"
2002.02.14-09:58:50.456/[log]/WARNING:previous attrib = group
2002.02.14-09:58:50.458/[log]/WARNING:action =
"/OPS/drill?attrib=esdt"
2002.02.14-09:58:52.941/[log]/WARNING:previous attrib = esdt
2002.02.14-09:58:52.944/[log]/WARNING:action =
"/OPS/drill?attrib=date"
2002.02.14-
09:59:06.171/[log]/webaccess.webtier.FTPServlet:[198.118.220.1] Ftp
science data file: /datapool/OPS/user/ASTT/AST_EXP.001/2000.02.26//E0
4202570420259AAAAAAA00057184501200.EDS    size=504
2002.02.14-
09:59:06.174/[log]/webaccess.webtier.FTPServlet:[198.118.220.1] Ftp
science data file: /datapool/OPS/user/ASTT/AST_EXP.001/2000.02.26//E0
4202570420259AAAAAAA00057184501201.EDS    size=296129075
```

- If there is no indication of appropriate activity, there may be indication of a problem with communication or other area, such as in the following example:

```
2002.02.14-18:13:44.519/[log]/WARNING:previous attrib = home
2002.02.14-18:13:44.540/[log]/WARNING:action =
"/OPS/drill?attrib=group"
2002.02.14-18:13:44.567/[log]/ERROR:SQLException: JZ0C0: Connection
is already closed.
  Error code: 0
   SQL State: JZ0C0
Exception - java.sql.SQLException: JZ0C0: Connection is already
closed.
      at java.lang.Throwable.fillInStackTrace(Native Method)
      at java.lang.Throwable.fillInStackTrace(Compiled Code)
      at java.lang.Throwable.<init>(Compiled Code)
      at java.lang.Exception.<init>(Compiled Code)
      at java.sql.SQLException.<init>(Compiled Code)
      at com.sybase.jdbc2.jdbc.ErrorMessage.raiseError(Compiled Code)
      at com.sybase.jdbc2.jdbc.SybConnection.checkConnection(Compiled
Code)
```

Depending on the log entry, it may be appropriate to investigate potential problems with communications [refer to the procedure **Recovering from a Connectivity Problem (Procedure 3.1)** (previous section of this lesson)] or database access [refer to the procedure for **Recovery from a Database Access Problem (Procedure 4.1)** (previous section of this lesson)].

- If there is indication of appropriate download activity in the log(s), the download should be functioning. If there is still a problem, it is appropriate to prepare and submit a Trouble Ticket.

Recovering from Data Distribution Problems

Data distribution is key to any system functions that require the copying of data from the Archive. These functions include not only providing data to external users, but also providing data to internal system components.

Distribution on various media (e.g., 8mm tape, CD ROM, DVD) is achieved using the Product Distribution System (PDS) and is generally limited to providing data for external users. The FtpPull process is also generally for external distribution. The FtpPush process is central to many key system functions. For example, it is the means by which data are distributed among components of the system (e.g., as needed for data processing). Therefore, FtpPush must be working in order to run PGEs. The FtpPush process is also used for transfer of data to the PDS where media preparation is executed. All data distributions are dependent on the presence of the required data in the SDSRV database and in the archive.

The distribution process may be tested in an acquire with the DSS Driver. The FTP processes use the Ftp server. The FtpPull process uses the FtpPull Monitor server. Therefore, the appropriate servers must be up and functioning correctly in order for data distribution to be successful. Use the following procedure to recover from data distribution problems.

Recovering from Data Distribution Problems (Procedure 15.1)

1 Ensure that the Data Distribution personnel have attempted appropriate operational solutions.

- Refer to the section on Troubleshooting Data Distribution Problems and the procedure for **Recovering from a Data Distribution Failure** in the training lesson on Data Distribution (Document 625-EMD-009).

2 Use the Data Distribution (DDIST) GUI to determine if DDIST is handling a request for the data and to monitor the progress of the request [refer to the procedure for **Monitor/Control Data Distribution Requests** (Document 611-EMD-001, Section 18.2.3)].

- The DDIST GUI can be used to monitor the distribution request that is the focus of the problem. For troubleshooting/test purposes, use the DSS Driver to execute an acquire by the relevant distribution method and monitor its progress. A DSS Driver acquire uses system resources similar to those involved in a distribution of data to end users, although the resources used for a DSS Driver FtpPush are somewhat different from the system resources used in an internal distribution (e.g., for processing).

3 On the destination host for the files, execute **ls -l** command(s) to determine if the directory exists.

- If the appropriate directory is reflected, go to Step 5.
- If the directory does not exist, it is necessary to create it (e.g., have Production Planning and Processing personnel ensure that the target directory exists, creating it if necessary, or use the command **mkdir <*directory name*>**).
- ***Note***: If the distribution is for FtpPush to a user outside of the system, it may be necessary to coordinate with that user to ensure that you have the correct information about the path to which the data are to be pushed, or that the appropriate directory is available.

4 For an internal push or pull by FTP, examine the server logs to determine if the files were distributed to the correct directory, using the procedure for **Checking Server Log Files (Procedure 2.1)** (previous section of this lesson).

- If the server log **EcDsStFtpServerDebug.log** on the STMGT host (e.g., **e0drg01**, **g0drg01**, **l0drg01**, **n0drg01**) properly reflects the push in an entry similar to the following, go to Step 6:

Pushing /usr/ecs/<*mode*>/CUSTOM/drp/<*host*>/data/staging//cache/:SC:AST_L1B.001:1384:1.HDF-EOS to /usr/ecs/<*mode*>/CUSTOM/pdps/<*host*>/data//DpPrRm/<*host*>_disk/AST_L1B_DataGranule.

- ***Note***: For FtpPush to end users, the server log of interest is **EcDsStFtpServerDebug.log** on the APC Server (e.g., **e0acg01**, **g0acg01**, **l0acg02**, **n0acg01**), and the path to which the data are pushed should reflect a location external to the system.
- If there is no entry, examine the DDIST log **EcDsDistributionServerDebug.log** on the DDIST host (e.g., **e0dis02**, **g0dis02**, **l0dis02**, **n0dis02**) for indication that the distribution has been suspended or that there is some other problem with the distribution; if necessary perform the procedure **Recovering from a Data Distribution Failure** (Data Distribution Lesson, Document 625-EMD-009).

5 Examine the server log (**EcDsStFtpServerDebug.log**) for an attempt to write to the directory with the result "Permission Denied," using the procedure for **Checking Server Log Files (Procedure 2.1)** (previous section of this lesson).

- If there is no evidence of incorrect permissions, go to Step 6 to determine if there are data in the staging area for the push.
- Incorrect permissions can be corrected by using a different account with the correct permissions, or by resetting the permissions. For Production Planning and Processing functions, it may be necessary to set up specific accounts planned for use in those functions.

6 On the appropriate host (e.g., **e0drg01**, **g0drg01**, **l0drg01**, **n0drg01**), type **cd /usr/ecs/<*mode*>/CUSTOM/drp/<*host*>/data/staging/cache** and then press the **Return/Enter** key.

- The prompt reflects the change to the specified directory.

7 Type **ls** and then press the **Return/Enter** key.

- If the file(s) are properly listed in output similar to the following, go to Step 8:

```
:SC:AST_L1BT.001:1411:1.HDF-EOS      SCAST_L1BT.11411.met
Niger-L1B-4.hdf                      staging.disk.filename.list
PACKING.LST.582292669708
```

- If the file(s) are not listed, it may indicate that there is insufficient space in the staging area for the staging disk. Examine the DDIST log **EcDsDistributionServer Debug.log** on the DDIST host (e.g., **e0dis02**, **g0dis02**, **l0dis02**, **n0dis02**) for indication of that or other problem with the distribution; if necessary perform the procedure **Recovering from a Data Distribution Failure** (Data Distribution Lesson, Document 625-EMD-009).

8 Examine the server logs to determine the last successful communication, using the procedure **Checking Server Log Files (Procedure 2.1)** (previous section of this lesson). Check **EcDsStFtpServerDebug.log**, **EcDsStArchiveServerDebug.log**, **EcDsStStagingDiskServerDebug.log**, and **EcDsStCacheManagerServerDebug.log** on the STMGT host (e.g., **e0drg01**, **g0drg01**, **l0drg01**, **n0drg01**), **EcDsScienceData ServerDebug.log** on the SDSRV host (e.g., **e0acs03**, **g0acs03**, **l0acs03**, **n0acs04**), and **EcDsDistributionServerDebug.log** on the DDIST host (e.g., **e0dis02**, **g0dis02**, **l0dis02**, **n0dis02**).

- If there is evidence of a communications disruption or failure, perform the procedure **Recovering from a Connectivity Problem (Procedure 3.1)** (previous section of this lesson).

9 Execute *EcCsIdPingServers* and note machines with which DDIST communicates from ***x*0dis02** [refer to the procedure for **Using EcCsIdPingServers to determine server status** (previous section of this lesson)].

- It may be necessary to reboot any machine(s) from which there is no response [refer to the procedure to **Perform Warm Startup by Subsystem** (Document 611-EMD-001, Section 3.2.1.3)].

Recovering from Problems with Submission of an ASTER Data Acquisition Request (LP DAAC Only)

Authorized scientists will use the ASTER DAR Tool to submit ASTER Data Acquisition Requests to the ASTER Ground Data System (GDS) in Japan. The ASTER DAR Tool and submission of DARs is supported by the LP DAAC, where associated subscriptions are placed for notification that the data resulting from the requests have been received, and where the data will be archived. Use the following procedure to recover from problems with submission of an ASTER DAR.

Recovering from Problems with Submission of an ASTER Data Acquisition Request (Procedure 16.1)

1 Check to ensure that the user attempting the DAR submission is an ECS User with a registered account with DAR permissions enabled.

- Use the ECS Account Management GUI to profile the user's account and review the associated DAR Information [refer to **Edit/Modify DAR Information for Account** (Document 611-EMD-001, Section 19.1.4.6)]. If the user is not authorized to submit a DAR, it may be necessary to refer that user to the U.S. ASTER website at the following URL:

  http://asterweb.jpl.nasa.gov

  and select the link there for **Obtaining Data** (under the link for **Data**).

- (**Note**: When a user account is authorized for DAR permissions, the system submits a request to the ASTER GDS for establishment of a corresponding authorization there. If an otherwise authorized user receives a message on the ASTER DAR Tool refusing a DAR submission, it may be necessary to coordinate with the ASTER GDS to verify that they have taken the action necessary to establish an account there.)

2 Verify that the necessary servers are "up" and listening; use the command line **ps -ef | grep <*server process*>**, or otherwise monitor server status [refer to **Using ECS Assistant to Monitor Server Status** and **Using EcCsIdPingServers to determine server status** (previous section of this lesson) or **Using Whazzup and ECS Monitor to Check the Status of Hosts and Servers** (previous section of this lesson), and, if necessary, the procedure to **Check the Status of Hosts and Servers (Procedure 1.1)**]. The following servers are necessary:

- EcMsAcRegUserSrvr (on e0mss21).
- EcGwDARServer (on e0ins01).
- EcSbSubSrvr (on e0ins01).
- EcCsMojoGateway (on e0ins01).
- EcClWbJessProxyServer (on e0ins02).

- EcClWbFoliodProxyServer (on e0ins02).
- Netscape Enterprise Server (on e0dms03)

3 Check the configuration parameters for the DAR Gateway in the Configuration Registry (may be a Configuration Manager or Database Administrator function) to make sure that the correct IP address and port number for the ASTER GDS are reflected.

- The parameters should reflect information similar to the following:

```
#GDS API parameters
GdsIPAddress        = 210.138.101.43
GdsPort             = 10500
GdsTimeOut          = 10
```

(**Note**: The specific IP Address and Port should be set to values that are correct for the ASTER GDS. During testing before operational connection to the GDS, these values are set to reflect site-specific and mode-specific connection to the ASTER GDS simulator.)

4 Examine the server log files for activity reflecting the DAR submission [refer to the procedure for **Checking Server Log Files (Procedure 2.1)** (previous section of this lesson)].

- The **jess.log** (on e0ins02, in **/usr/ecs/<*mode*>/CUSTOM/jdt**) should reflect the start of a session and user log-in for use of the ASTER DAR Tool, with entries similar to the following:

```
20010123.154841 Logging all mojo transactions to '/tmp/mojotxn_<mode>.log'.
20010123.154841 Listening for new connections on e1ins02u.ecs.nasa.gov, port <#####>
20010123.162558 D:starting login for user <user ID>
.
.
.
```

and then reflect use of the tool to create a DAR with entries similar to the following:

```
20010123.162559 <user ID>:Servlet.AuthServlet(980285158401):initialized
20010123.162559 <user ID>:Servlet.AuthServlet(980285158401):processing
20010123.162559 <user ID>:Servlet.ModelFileLogger(980285159497):First time user -
initializing
20010123.162559 <user ID>:Servlet.ModelFileLogger(980285159497):Copying default user
info
20010123.162559 <user ID>:Servlet.ModelFileLogger(980285159497):put
Folder {      UOID = "4242424242424242";      Name = "Untitled Folder";
    TimeStamp = "Dec 18 1999 13:00:00 EST"; }
20010123.162559 <user ID>:Servlet.ModelFileLogger(980285159497):initialized
20010123.162559 <user ID>:Servlet.ModelFileLogger(980285159497):processing
20010123.162559 <user ID>:Servlet.UserProfileServlet(980285159757):initialized
20010123.162559 <user ID>:Servlet.UserProfileServlet(980285159757):processing
```

20010123.162559 <*user ID*>:Servlet.UserProfileServlet(980285159757):Type listeners removed
20010123.162559 <*user ID*>:Servlet.UserProfileServlet(980285159757):Object listeners removed
{Root, Root, 942338909056, 499530658}
{Untitled Folder, Folder, 4242424242424242, 499531739}
{0, XAR, 942338925546, 499529412}
{General - Primary Attributes, PrimaryAttribute, 942338925608, 499524693}
{General - Telescope Gains, TelescopeSetting, 942338925643, 499533322}
{Spatial, SpatialSetting, 942338925724, 499533250}
{Temporal, TemporalSetting, 942338925911, 499530170}
{Coverage, CoverageDetailsSetting, 942338925991, 499529226}
.
.
.

and then indicate successful communication with the ASTER Ground Data System to submit the DAR and receive a DAR ID.

- If the log does not reflect appropriate activity associated with the submission of the DAR, ensure that the involved servers are up and listening [refer to **Starting Whazzup and Monitoring the Status of Hosts and Servers** (previous section of this lesson), and, if necessary, the procedure to **Check the Status of Hosts and Servers (Procedure 1.1)**]. It may also be necessary to ensure proper connectivity [refer to the procedure for **Recovering from a Connectivity Problem (Procedure 3.1)** (previous section of this lesson)].
- If the **jess.log** reflects a start-up error similar to the following:

STARTUP ERROR:20010219.122212 Error: java.net.BindException: Addr

it will be necessary to restart **jess**. This necessitates obtaining the process ID (pid) for **java_vm_** (use the UNIX command **ps**) and stopping that process (use the UNIX command **kill -15 <*pid*>**), before issuing the command **start_jess <*mode*>** (on e0ins02, in **/usr/ecs/<*mode*>/CUSTOM/jdt/bin**).

- Other error indications in the **jess.log** may be similar to the following:

20001218.125127 <*user ID*>:Servlet.ModelFileLogger(977160725207):done
20001218.125127 <*user ID*>:Servlet.SessionServlet(977160725690):done
20001218.125127 <*user ID*>:Servlet.AuthServlet(977160724063):done
20001221.115952 <*user ID*>:Closing session
20001221.115952 <*user ID*>:exception closing mojo socket: Broken pipe

20001221.115952 <*user ID*>:Removing session: <*user ID*>

and:

JDT::Error[999]:FATAL:jdt.services.xar.SubmissionAgent:REQUEST_HANDLING:ClWbJt.mojo.ConnectionException: ErrorCode 15011
Error received from GDS

ClWbJt.mojo.ConnectionException: ErrorCode 15011
.
.
.

5 Check the Subscription Server GUI to ensure that a subscription is registered for the DAR [refer to the procedure to **Use the Spatial Subscription Server GUI to List and View Subscriptions in the NBSRV Database** (Document 611-EMD-001, Section 19.4.4)].

- If the subscription is not reflected on the Subscription Server GUI, use the procedure **Checking Server Log Files** (previous section of this lesson) to determine if the **EcCsMojoGatewayDebug.log** indicates that a subscription request was sent to the subscription server, and to determine if the **EcSbSubServerDebug.log** indicates that the subscription server received the subscription request.
- If the subscription was not registered, check that the Subscription function is working properly [refer to the procedure for **Recovering from a Subscription Server/ NBSRV Problem (Procedure 6.1)** (previous section of this lesson)].

Recovering from Problems with On-Demand Product Requests (LP DAAC Only)

Authorized users may use the On-Demand Form Request Manager (ODFRM) to submit requests for production of ASTER Digital Elevation Model (DEM) products or non-standard ASTER Level 1B products, and any user may use the ODFRM to order non-restricted ASTER higher-level products. Also, the ODFRM may be used to order a higher-level ASTER product at the time of submission of a DAR; the request is attached to the DAR. Such requests result in creation of an order for the higher-level product and in the submission of a Data Processing Request through the On-Demand Production Request Manager (ODPRM) in the Planning subsystem. The ODFRM Tool and submission of on-demand production requests is supported by the LP DAAC. Use the following procedure to recover from problems with submission of an on-demand production request. (***Note***: On-Demand Requests may be submitted using the EDG Search and Order tool, and the ODFRM is generally not used. In the following procedure, Steps 5 and 6 relating to the data processing and order processing are relevant. See also Procedure 13.1 **Recovering from Problems with Data Search and Order**.)

Recovering from Problems with Submission of an On-Demand Production Request (Procedure 17.1)

1 Check to ensure that the user attempting the on-demand production request submission is an ECS User with a registered account with any necessary permissions enabled.

- Use the ECS Account Management GUI to profile the user's account and review the associated privilege information. If necessary and the user privileges have been authenticated, ASTER data access permission may be granted by means of a button on the **Account Information** subtab of the **Profile Account** tab on the SMC Account Management tool.

2 Verify that the necessary servers are "up" and listening; use the command line **ps -ef | grep <*server process*>**, or otherwise monitor server status [refer to previous sections of this lesson concerning **Using the ECS Assistant Server Monitor** and **Using EcCsIdPingServers to determine server status** or **Using WhatsUp Gold, Whazzup, ECS Monitor, and EcCsIdPingServers to Check the Status of Hosts and Servers**, and, if necessary, **Check the Status of Hosts and Servers (Procedure 1.1)**]. The following custom servers are necessary:

- EcMsAcRegUserSrvr (on e0mss21).
- EcMsAcOrderSrvr (on e0mss21).
- EcPlOdMgr (on e0pls02).
- EcCsRegistryServer (on e0dms03).
- EcSbSubSrvr (on e0ins01).

3 If a user cannot access the ODFRM, check the Netscape Enterprise Server configuration file (**/usr/ecs/<*mode*>/COTS/ns-home/<*server_name*>/config/magnus.conf**) to make sure that the correct server ID, server name, IP address, and port number for the tool are reflected.

- The parameters should reflect information in format similar to the following:

```
.
.
ServerID https-t1ins01
ServerName t1ins01.vatc
Address 198.118.232.40
Port 80
.
.
.
```

4 Examine the server log files for activity reflecting connection to the On Demand Manager and successful submission of the on-demand request [refer to the procedure for **Checking Server Log Files (Procedure 2.1)** (previous section of this lesson)].

- The Netscape Enterprise Server **access** log reflects user access activities for the tool, and the **errors** log is similar to a **Debug.log** for server events. These logs may be found on **e0dms03** in **/usr/ecs/<*mode*>/COTS/ns-home/<*server_name*>/logs**.
- The **EcClOdProductRequest.ALOG** (on e0ins02, in **/usr/ecs/<*mode*>/CUSTOM/logs**) should reflect the connection and submission of the request, with entries similar to the following:

```
PID : 20353:MsgLink :0 meaningfulname :ClOdProductSelection::MediaOptionsForm
 Msg: MediaOptions Request Successful Priority : 0 Time : 12/15/00 10:22:25
PID : 20458:MsgLink :0 meaningfulname :SUCCESSFULLYCONNECTED
 Msg: Client Successfully connected to On Demand Server Priority : 0 Time : 12/15/00
10:24:03
PID : 20458:MsgLink :0 meaningfulname :ClOdProductRequest::SubmitProductRequest
 Msg: Product Request Successfull Priority : 0 Time : 12/15/00 10:24:10
PID : 20458:MsgLink :0 meaningfulname :SUCCESSFULLYDISCONNECTED
 Msg: Client Successfully disconnected from On Demand Server Priority : 0 Time :
12/15/00 10:24:10
```

- If the log shows evidence of a communications problem, refer to the procedure for **Recovering from a Connectivity Problem (Procedure 3.1)** (previous section of this lesson).

5 On e0pls02, in **/usr/ecs/<*mode*>/CUSTOM/logs**, examine the **EcPlOdMgr.ALOG** for evidence that the request was received and properly handled by the On-Demand Production Request Manager.

- The log should contain entries similar to the following:

```
PLS EcPlOdMgr Server Output log on t1pls01 starting at Thu Feb 15 11:54:19 EST 2001
PID : 14658:ThreadID : 1 : MsgLink :0 meaningfulname :SEVERMAINPROCSTART
 Msg: Starting PlOdMgrServer: ProcStart=PlOdMgrServer Priority: 2 Time : 02/15/01
11:55:29
PID : 14658:ThreadID : 1 : MsgLink :0 meaningfulname :ENTERMYSTART
 Msg: Creating instance of PlOdMsgDObj_1_0_Mgr Priority: 0 Time : 02/15/01 11:55:29
PID : 14658:ThreadID : 1 : MsgLink :0 meaningfulname :MYSTARTREGITERING
 Msg: Registering PlOdMsg_1_0_Mgr.... Priority: 0 Time : 02/15/01 11:55:31
PID : 14658:ThreadID : 1 : MsgLink :0 meaningfulname :MYSTARTINITMSG
 Msg: Initializing Msg.... Priority: 0 Time : 02/15/01 11:55:32
.
.
.
PID : 9785:ThreadID : 31 : MsgLink :0 meaningfulname :SUCCESSFULLYCONNECTED
 Msg: Client Successfully connected to Job Management Server Priority: 0 Time : 02/01/01
20:11:30
```

.
.
.
PID : 9785:ThreadID : 31 : MsgLink :0 meaningfulname :NewState
Msg: RequestId= 0300004313 NewState= Queued PDPS DPR Id= Priority: 0 Time : 02 /01/01 20:11:58
.
.
.
PID : 9785:ThreadID : 31 : MsgLink :0 meaningfulname :SUCCESSFULLYCONNECTED
Msg: Client Successfully disconnected from Job Management Server Priority: 0 Time : 02/01/01 20:23:52

- If the log shows evidence of errors, in entries such as the following:

.
.
.
PID : 9785:ThreadID : 31 : MsgLink :0 meaningfulname :DpPrDbColValList::ValueAt
Msg: Failed due to column maxGranReq not found in the list Priority: 2 Time : 02/01/01 20:40:31
PID : 9785:ThreadID : 31 : MsgLink :0 meaningfulname :DpPrDbInterface<DpPrClass>::SelectAndReadObject with a list of where constraints
Msg: Select successed. No row is retrieved into the given object. Priority: 2 Time : 02/01/01 20:40:31
PID : 9785:ThreadID : 31 : MsgLink :82 meaningfulname :PlCoPerformanceReadCANTREAD
Msg: Unable to read performance parms Priority: 2 Time : 02/01/01 20:40:31
PID : 9785:ThreadID : 31 : MsgLink :0 meaningfulname :Notice
Msg: Opending a connection to DGS. Priority: 2 Time : 02/01/01 20:40:32
PID : 9785:ThreadID : 31 : MsgLink :0 meaningfulname :Error
Msg: Connected to the socket server. Priority: 2 Time : 02/01/01 20:40:32
PID : 9785:ThreadID : 31 : MsgLink :0 meaningfulname :Notice
Msg: Sending a Service Request to the socket server. Priority: 2 Time : 02/01/01 20:40:32
PID : 9785:ThreadID : 31 : MsgLink :0 meaningfulname :Notice
Msg: ODL Tree was sent to the socket server. Priority: 2 Time : 02/01/01 20:40:32
PID : 9785:ThreadID : 31 : MsgLink :0 meaningfulname :Notivr
Msg: Received Service Request Results from the socket server. Priority: 2 Time : 02/01/01 20:41:31
PID : 9785:ThreadID : 31 : MsgLink :0 meaningfulname :REQUESTSUBMISSIONFAILED
Msg: Request submission failed from PlNonStandardOrder for request. 0300004317 Priority: 2 Time : 02/01/01 20:41:31
PID : 9785:ThreadID : 31 : MsgLink :0 meaningfulname :CANTSUBMITL1BREQUEST
Msg: Unable to submit L1B request to ECS-GDS for order 0300004046 Priority: 2 Time : 02/01/01 20:41:31
PID : 9785:ThreadID : 31 : MsgLink :0 meaningfulname :CANTBUILDPR
Msg: Unable to build PRs from order 0300004046 Priority: 2 Time : 02/01/01 20:41:31

```
PID : 9785:ThreadID : 31 : MsgLink :0 meaningfulname :EcPoErrorA1
 Msg: EcPoError::HandleRWError SybaseDatabaseError# RogueWaveDBToolsErrorCode
=7;RogueWaveDBToolsErrorMesage
 ="[VENDORLIB] Vendor Library Error: ct_res_info(): user api layer: external error: This
routine cannot be called when the command structure is idle."
SybaseErrorCode1 =16843163;SybaseErrorMesage1 =""
SybaseErrorCode2 =1;SybaseErrorMesage2 ="ZZZZZ"
 Priority: 0 Time : 02/01/01 20:41:31
.
.
.
```

then examine the debug log (**EcPlOdMgrDebug.log**) for evidence of communication problems and, if necessary, perform the procedure **Recovering from a Connectivity Problem (Procedure 3.1)** (previous section of this lesson).

6 On the System Management Support Subsystem (MSS) host (e.g., **e0mss21**, **g0mss21**, **l0mss21**, **n0mss21**), launch the ECS Order Tracking GUI [refer to the procedure **Launch the ECS Order Tracking GUI** (Document 611-EMD-001, Section 19.5.1)] and determine if the order is reflected in MSS order tracking [refer to the procedure **Use the ECS Order Tracking GUI to Find and Review a User's Order and Request Information** (Document 611-EMD-001, Section 19.5.2)].

- If the ECS Order Tracking GUI does not reflect the order, it may be instructive to examine the Order Tracking database (Database Administrator function) by logging into Sybase on the relevant MSS host [use procedure similar to Steps 4 and 5 of **Recovering from a Subscription Server/NBSRV Problem (Procedure 6.1)** (previous section of this lesson)] and then selecting the User Name.
- If the order is not reflected in the Order Tracking database, perform the procedure for **Recovery from a Database Access Problem (Procedure 4.1)** (previous section of this lesson).
- If the order is reflected in MSS order tracking, perform troubleshooting procedures related to production processing, using relevant steps in the procedure **Recovering from PDPS Plan Creation/Activation and PGE Problems (Procedure 10.1)** (previous section of this lesson).

Trouble Ticket (TT)

We have seen that a system problem is typically documented using the Remedy COTS software product to prepare and update a problem report or trouble ticket (TT). Because there is a separate lesson that covers writing a trouble ticket, documenting changes, preparing and processing a trouble ticket through the failure resolution process, and making emergency fixes, these topics are not addressed in detail here. By now you are familiar with the requirements for using trouble tickets in problem management. You know that troubleshooting and repair activities that involve changes to the system configuration require a configuration change request (CCR).

Using Problem Report Software

Although you are familiar with using Remedy to create and view trouble tickets, there are other functions associated with the maintenance and operation of the trouble ticket service that you may be required to manage as a System Administrator or other manager. Specifically, the following tasks associated with Remedy may be required of the TT administrator or others:

- adding users to Remedy.
- controlling and changing privileges in Remedy.
- generating Trouble Ticket reports.

Adding users to Remedy is done with the Remedy User form launched from a UNIX environment. Other administrative functions are done with the Remedy Administration tools, implemented on a personal computer.

Figure 36 shows the screen layout for the Remedy **User** form that is used for adding users. This screen is accessible to administrators with Administrator Group privileges by entering a Unix command beginning with the directory where Remedy is installed and invoking the user tool (e.g., on ***x*0mss21**, enter command **/usr/ecs/*MODE*/COTS/remedy/bin/aruser &**). This results in display of the user tool, from which you launch the **User** form.

Most Remedy administrative functions are accomplished using the Remedy Administration tool, implemented in the Windows environment on a personal computer. When the Remedy Administration tool is launched, the first display is a briefly shown Action Request System logo, followed by a log-in dialog, as illustrated in Figure 37. As the figure shows, the log-in dialog also provides an **Accounts . . .** button for selecting the user account and servers to be addressed in the administration session.

When the account and servers have been selected and the log in is complete, the Remedy Administrator Server Window is displayed. In this window, the server directory structure may be expanded and an object type may be selected, as illustrated in Figure 38, for performing administrative functions on various “objects” (e.g., forms, groups).

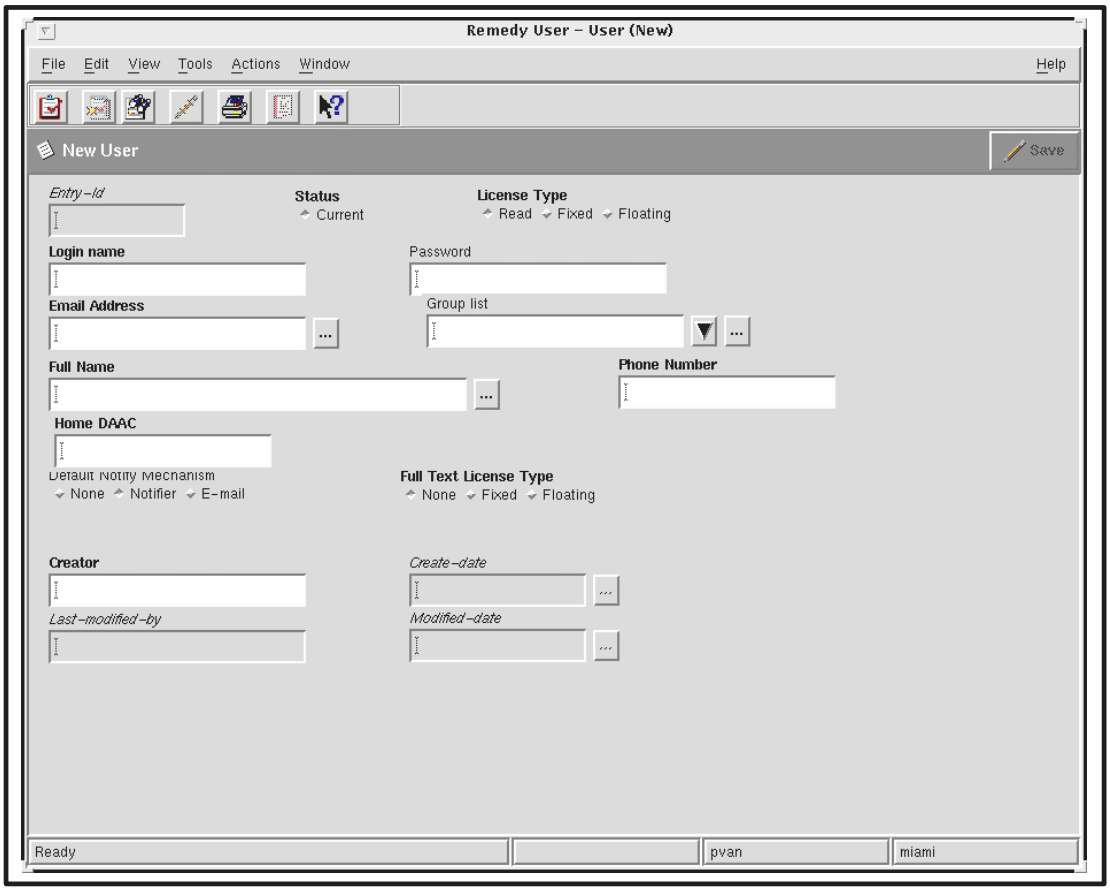

Figure 36. Remedy User Form

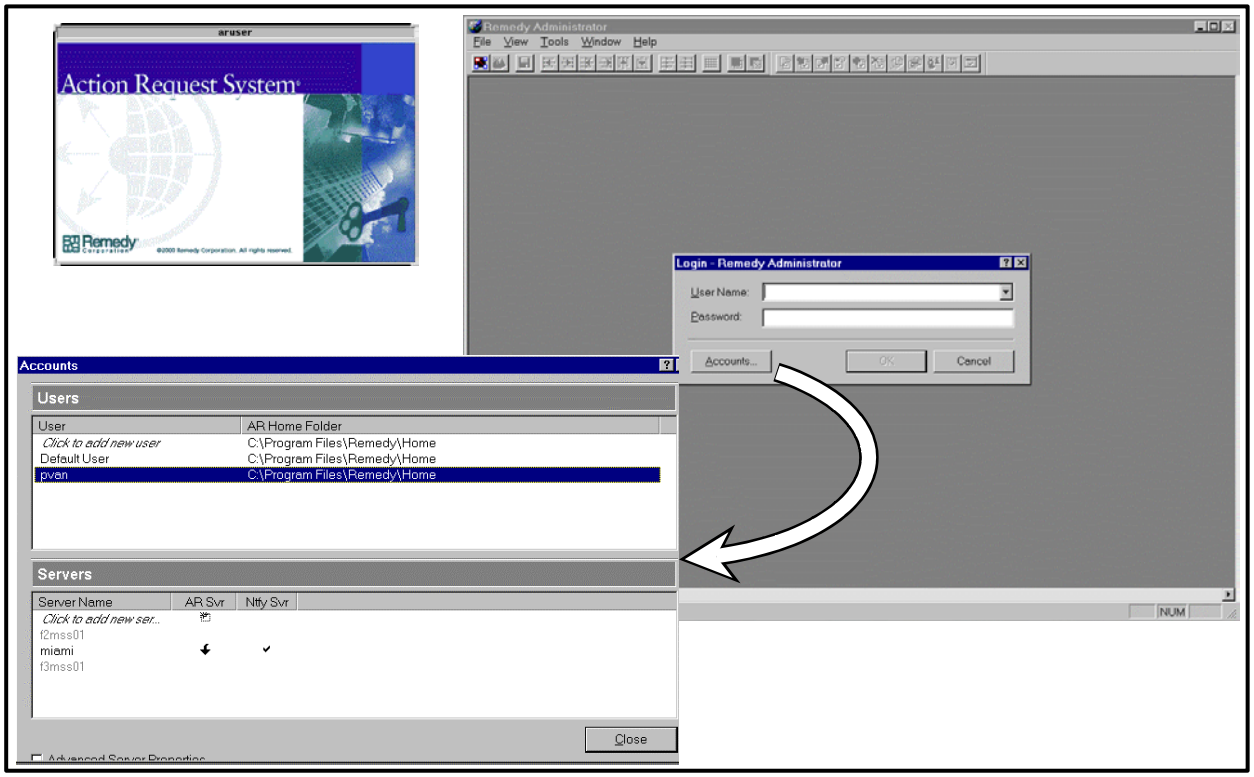

Figure 37. Remedy Admin Log In

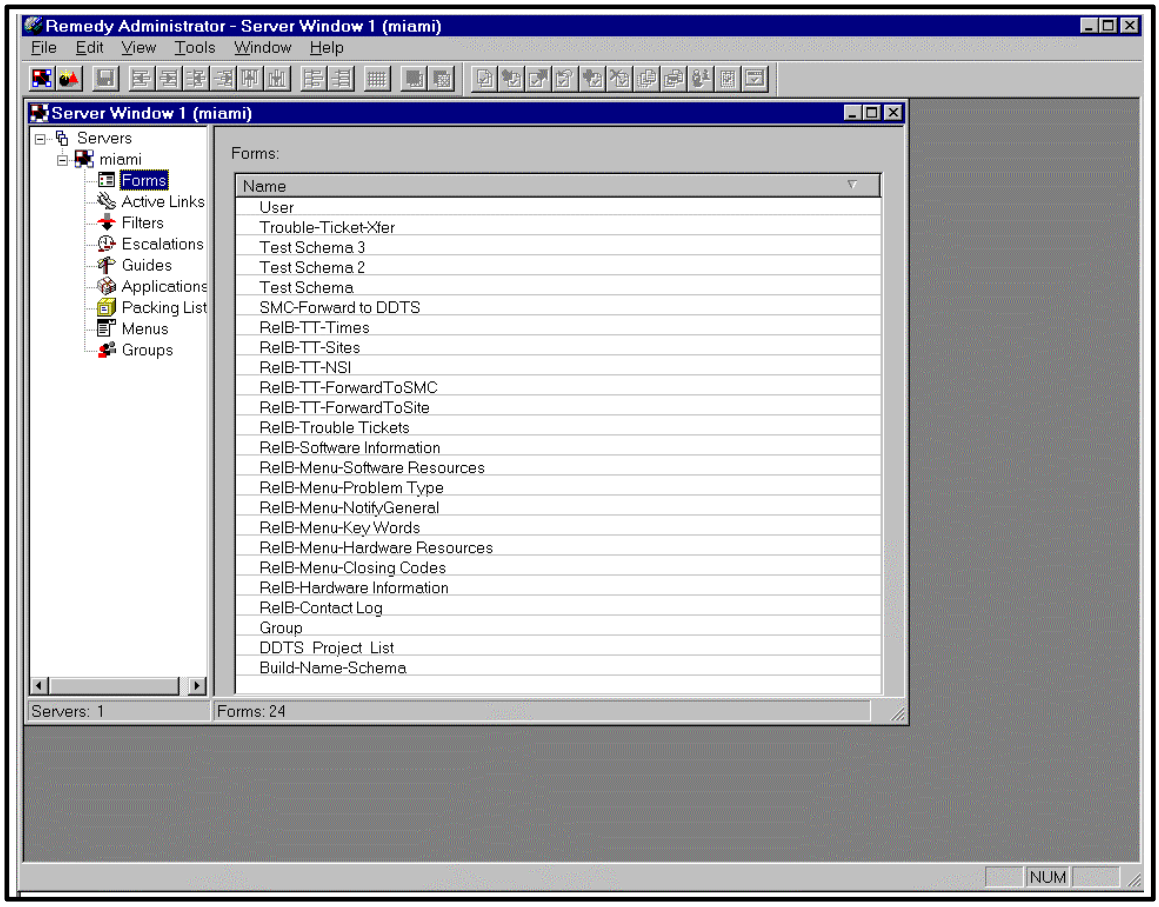

Figure 38. Remedy Admin Server Window

Launching Remedy Forms and Tools

The Remedy User form, used to create and view Trouble Tickets or to create and update User Contact Log records, is also used by the Remedy Administrator to add users to Remedy. Use the following procedure to launch the Remedy User form.

Launching the Remedy User Form

1 Access the command shell.

- The command shell prompt is displayed.

NOTE: Commands in Steps 2 through 7 are typed at a UNIX system prompt.

2 Type **setenv DISPLAY *clientname*:0.0** then press the **Return/Enter** key.

- Use the terminal/workstation IP address or the machine-name for the ***clientname***.

3 Start the log-in to the MSS client server by typing either **/tools/bin/ssh *hostname*** (e.g., **e0mss21**, **g0mss21**, **l0mss21**, **n0mss21**) and then press the **Return/Enter** key.

- If you receive the message, **Host key not found from the list of known hosts. Are you sure you want to continue connecting (yes/no)?** type **yes** ("**y**" alone does not work) and then press the **Return/Enter** key.
- If you have previously set up a secure shell passphrase and executed **sshremote**, a prompt to **Enter passphrase for RSA key '<*user@localhost*>'** appears; continue with Step 5.
- If you have not previously set up a secure shell passphrase; go to Step 6.

4 If a prompt to **Enter passphrase for RSA key '<*user@localhost*>'** appears, type your ***Passphrase*** and then press the **Return/Enter** key. Go to Step 7.

5 At the **<*user@remotehost*>'s password:** prompt, type your ***Password*** and then press the **Return/Enter** key.

6 Type **cd /*path*** then press the **Return/Enter** key.

- Change directory to the path (e.g., **/usr/ecs/<*MODE*>/COTS/remedy/bin**) containing the Remedy command files.
- The **<*MODE*>** will most likely be one of the following operating modes:
  - OPS (for normal operation).
  - TS1 (for testing).
  - SHARED (for other uses).
- Note that the separate subdirectories under **/usr/ecs** apply to different operating modes.

7 Type **aruser &** then press **Return/Enter**.

- If you are a first-time user, a login window is displayed; enter your Remedy user ID and password.
- A Remedy Action Request System logo window is displayed briefly, followed by a Remedy initial screen from which a number of custom application forms may be launched.

Use the following procedure to launch the Remedy Administration tool.

Launching the Remedy Administration Tool

1 Execute the aradmin.exe application in the Windows environment (e.g., double click on the **aradmin.exe** listing in a Windows Explorer window, or click on the **Start** button in the Windows taskbar and then click on the **Run . . .** option to open the **Run** dialog, from

which you then enter the path for the **aradmin.exe** application. A typical path is **c:\Program Files\Remedy\aradmin.exe**, which may be entered or selected by clicking on the **Browse** button and navigating to the path. When the path is displayed in the **Open:** field of the **Run** dialog, click on the **OK** button.).

- A Remedy Action Request System logo window is displayed briefly, followed by a **Login – Remedy Administrator** dialog box with entry fields for ID and password. The login window also displays three buttons: **Accounts . . .** , **OK**, and **Cancel**.

2 Enter your Remedy Administrator ID and password.

3 Click on the **Accounts . . .** button.

- The **Accounts** window is displayed, showing lists of **Users** and **Servers**.

4 In the **Users** list, click on the entry for your user ID.

- The selected entry is highlighted.

5 Ensure that the **Servers** list shows the Remedy host (e.g., **mss21**) and that an arrow appears in the **AR Svr** column and a check mark appears in the **Ntfy Svr** column for that server. If necessary, click the server entry and then click in the appropriate columns to display the necessary marking.

- ***Note***: The orientation of the arrow in the **AR Svr** column indicates the status of your connection. If the arrow points up, you have a successful connection. If you have not yet made a connection, or if a connection attempt has been unsuccessful, the arrow points down.

6 When you are satisfied with the server selections, click on the **Close** button in the **Accounts** dialog.

- The **Accounts** dialog is closed.

7 Click on the **OK** button in the **Login – Remedy Administrator** dialog box.

- The **Login – Remedy Administrator** dialog is closed and the **Remedy Administrator – Server Window** is displayed.

Adding Users to Remedy

The TT Administrator uses the Remedy User form to grant access to the Remedy tool. Users who leave the EMD program can be deleted. The Remedy *Action Request System 4.5 Concepts Guide*, Chapter 6, "Controlling Access to AR System," summarizes access control and license elements. There are three classes of licenses that can be assigned to users:

- The **Read** class allows users to submit requests (e.g., Trouble Tickets, User Contact Log records) and modify their own requests. Thus, there are no license restrictions on the number of users who can be granted permission to create and read trouble tickets.
- The **Fixed Write** class provides the capabilities of the Read class plus the ability to modify existing requests submitted by others. A Fixed Write license assigned to a user is always reserved for that user. The AR system administrator must have a Fixed Write license.
- The **Floating Write** class provides the capabilities of the Fixed Write class, but these licenses are not reserved to a single user; instead, they are available on a first-come, first-served basis. Each DAAC has five Floating Write licenses. It is appropriate to assign Floating Write licenses to those who will need to modify Trouble Tickets (e.g., those who will be assigned to work and resolve problems). The limit of five licenses should pose no problem, as it is unlikely that there will be many instances in which more than five people will be trying to modify Trouble Tickets at one time.

The Remedy *Action Request System 4.5 Workflow Administrator's Guide*, Chapter 3, "Defining Access Control," provides information on using the **User** form (a "form" represents a table in the Remedy database) to add registered users.

Suppose, for example, that you wish to add Terry Bulticketer from the GSFC DAAC as a user with submit and read permissions. His e-mail address is tbultick@ecsgsfc1.gsfc.nasa.gov, and his phone number is 301-614-4132. The data to be entered to add a user include:

- Status – is the user current or not?
- License Type – what type of license does the user have? The default, **Read**, includes submit and read permission.
- Login Name – the identifying name the user will enter to use the Remedy tool.
- Password – the identifying password the user will enter to use the Remedy tool.
- Email Address – the e-mail address of the user.
- Group List – specifies a user's access control groups; if you wish the user to have only basic submit and query privileges, this field must be left empty.
- Full Name – the user's full name.
- Phone Number – the user's telephone number.
- Home DAAC – the user's home DAAC.
- Default Notify Mechanism – the way in which the user will be notified of actions.

- Full Text License – the type of full text search license the user is to have; the default is **None**, which is what users will be assigned (full-text search is not part of the current implementation).
- Creator – the person who created the account.

The system generates the content of the other fields. Use the following procedure.

Adding a User to Remedy

1 With the Remedy User Tool open (i.e., after you, as a member of the Administrator group, have entered the UNIX command **/usr/ecs/*MODE*/COTS/remedy/bin/aruser &** on host ***x*0mss21**), follow menu path **File→Open** or click on the leftmost button near the top of the window.

- The **Open** dialog box is displayed, showing choices including: **RelB-Contact Log**, **RelB-TT-ForwardToSite**, **RelB-TroubleTickets**, and **RelB-TT-ForwardToSMC**, **Group**, and **User**.

2 Double click on **User** from the list in the Open dialog box, or click on **User** to highlight it and then click on the **New** button to open the **New User** form (Figure 36).

3 If necessary, click on the toggle button in front of **Current** to indicate the user's status (**Current** is the default).

4 Click on the toggle button in front of the desired license type (in this case, **Read**).

5 Click in the **Login Name** field and enter the login name (in this case, **tbultick**) to be used to access Remedy.

6 Click in the **Email Address** field and enter the user's e-mail address (in this case, tbultick@ecsgsfc1.gsfc.nasa.gov).

7 Click and hold the down arrow button at the end of the **Group list** field and drag the cursor to select (by releasing the mouse button) the desired group for this user (e.g., **Operator**).

- The selected group name appears in the **Group list** field.
- ***Note***: This step may be repeated to add the user to another group (i.e., a user may be assigned to more than one group).

8 Click in the **Full Name** field and enter the user's full name (**Terry Bulticketer**).

9 Click in the **Phone Number** field and enter the user's telephone number (**301-614-4132**).

10 Click in the **Home DAAC** field and enter the user's home DAAC (**GSFC**).

11 If you wish to select a default notification mechanism (e.g., e-mail), click on the toggle button in front of the desired selection (in this case, **E-mail**).

12 For **Full Text License Type**, ensure that the default, **None**, is selected; if necessary click on the toggle button in front of **None**.

13 Click in the **Creator** field and enter your name.

14 When you are satisfied that the entered information is correct and complete, click on the **Save** button near the upper right corner of the window (or follow menu path **Actions→Save**).

- The information is saved to the database.

15 To exit from the **Remedy Action Request System**, follow menu path **File→Exit**.

Changing Privileges in Remedy

Changing privileges in Remedy, or controlling privileges of those who have access to Remedy, is done by the TT Administrator. There are numerous Remedy privilege groups in the current implementation, and a change to the privileges of any group requires an approved Configuration Change Request (CCR). Access privileges determine which forms a user may open and specify whether a user may change information in a field or merely view it.

The Remedy Action Request System documentation (available at http://supportweb.remedy.com but requiring log-in) provides detailed information about access control and privileges. There is a section on "Adding Groups" that provides instruction on using the **Group** form to create access control groups to which users may then be assigned. A user's privileges may be changed in two ways:

- changing the group to which the user is assigned.
- changing the access privileges of the group.

We have seen that the **User** form is used to implement group assignment. To change the access privileges of a group, you use the **Admin** tool. It is accessed using the procedure **Launching the Remedy Administration Tool** (previous section of this lesson). There are two primary ways to change the access privileges of a group. Both ways use the **Group Permissions** window illustrated in Figure 39. This window is obtained by selecting **Groups** on the **Remedy Administrator – Server Window** and then double clicking on one of the listed groups. One way to change access privileges is to use the **Form Permissions** tab of the **Group Permissions** window (see the figure) to select which forms are available to members of the group when they access the **Open** dialog box of the **User** form. The second way is to use the **Field Permissions** tab (see the figure) to specify which fields of a form the members of the group may change and which fields they may view but not change.

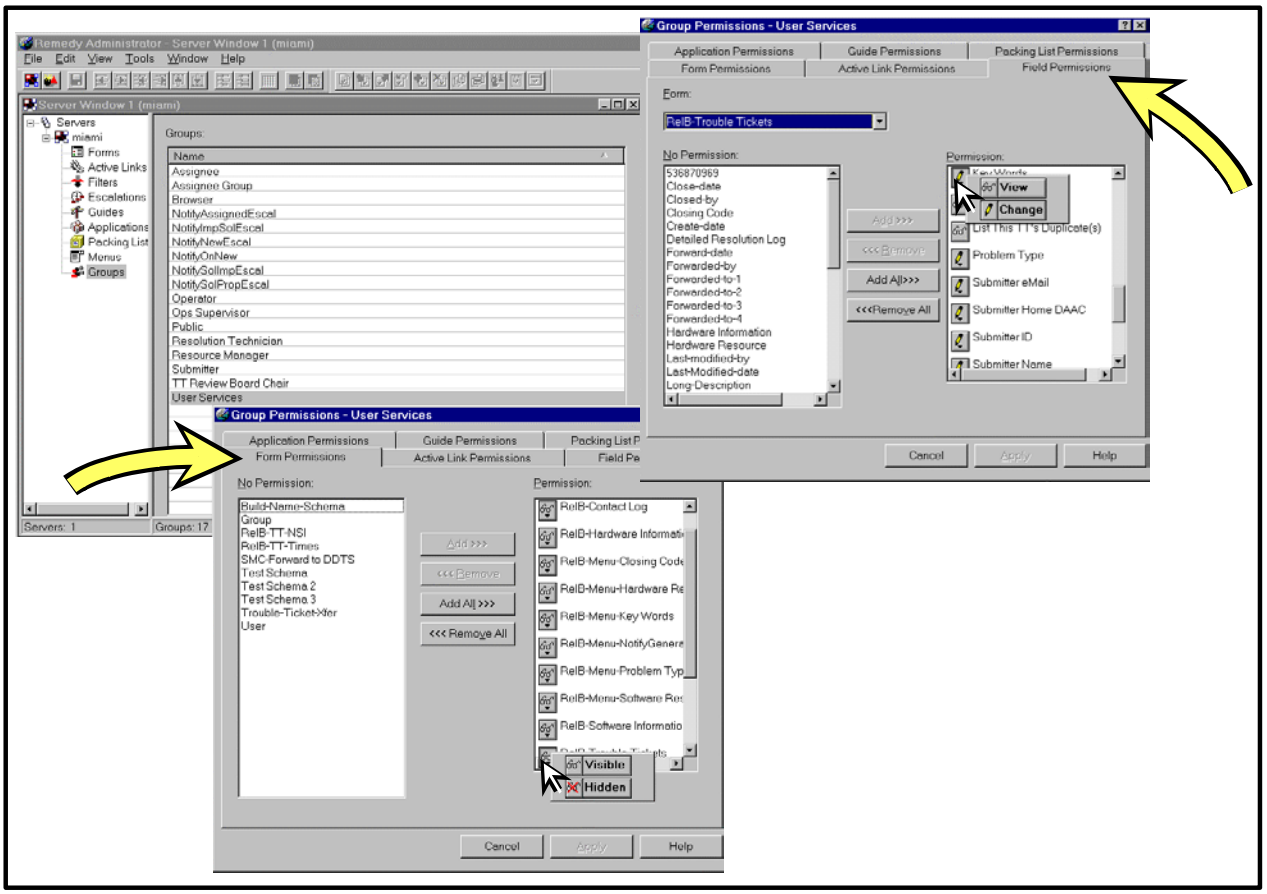

Figure 39. Remedy Admin Tool, Group Permissions Window

Use the following procedure to define which forms (Remedy database tables) a user will be able to select and open from the **Open** dialog of the **User** tool.

Defining Form Permissions for a Group

1 Launch the Remedy Administration tool using the procedure **Launching the Remedy Administration Tool** (previous section of this lesson).

- The **Remedy Administrator – Server Window** is displayed

2 In the left frame of the **Server Window**, if necessary click on the "+" sign in front of the name of the host for the Remedy user application (e.g., **e0mss21**, **g0mss21**, **l0mss21**, **n0mss21**) to expand the directory structure.

- A "–" sign is displayed in front of the host name and the directory structure is arrayed below the host name.

3 Click on the label **Groups** in the directory structure.

- The **Groups** label is highlighted and the list of available groups is displayed in the right frame of the **Server Window**.

4 In the right frame of the **Server Window**, double click on the name of the group for which permissions are to be defined or modified.

- The **Group Permissions** window is displayed, typically defaulted to showing **Form Permissions**. If the window defaults to different permissions, click on the **Form Permissions** tab.
- The **Form Permissions** tab is displayed and indicates current permission settings for the selected group, showing:
  - *No Permission* (i.e., a list of forms for which the group currently has no access).
  - *Permission and Visible* (i.e., marked with the icon as available in the list of **Forms** that can be opened by users in the selected group).
  - *Permission but Hidden* (i.e., marked with the icon as not available in the list of **Forms** that can be opened by users in the selected group, except that users who have **Customize** permissions can make a hidden field visible).

5 If desired, forms may be moved between the **Permission** and **No Permission** lists by clicking a form name to highlight it and then using the **Add>>>** or **<<<Remove** button as appropriate to implement the move. It is also possible to **Add All>>>** remaining items from the **No Permission** list or **<<<Remove All** items from the **Permission** list using the appropriate button.

- Any moved items appear in the list to which they were moved and do not appear in the list from which they were moved. Each item moved to the **Permission** list is marked as visible (i.e., the icon appears in front of it).

6 If desired, any item in the **Permission** list may be changed from "visible" to "hidden" or the reverse by clicking on its icon to display the Visible Hidden choice and then clicking on Hidden or Visible as appropriate.

- The appropriate icon (or) is displayed in front of the item in the list, indicating that members of the group will not see it displayed as one of the choices in the **Open** dialog of the **User** tool, or that it will be available as one of their choices.

7 Click on the **Apply** button.

- Any changes are implemented and the **Apply** button is grayed out.

8 Follow menu path **File → Exit**.

- The **Remedy Administration** tool is closed.

The **Field Permissions** tab of the **Group Permissions** window allows you to determine **View** or **Change** access to data in fields on a form. Use the following procedure to define group access for form fields.

Defining Group Access for Form Fields

1 Launch the Remedy Administration tool using the procedure **Launching the Remedy Administration Tool** (previous section of this lesson).

- The **Remedy Administrator – Server Window** is displayed

2 In the left frame of the **Server Window**, if necessary click on the "+" sign in front of the name of the host for the Remedy user application (e.g., **e0mss21**, **g0mss21**, **l0mss21**, **n0mss21**) to expand the directory structure.

- A "–" sign is displayed in front of the host name and the directory structure is arrayed below the host name.

3 Click on the label **Groups** in the directory structure.

- The **Groups** label is highlighted and the list of available groups is displayed in the right frame of the **Server Window**.

4 In the right frame of the **Server Window**, double click on the name of the group for which permissions are to be defined or modified.

- The **Group Permissions** window is displayed, typically defaulted to showing **Form Permissions**.

5 Click on the **Field Permissions** tab.

- The **Field Permissions** tab is displayed with its fields empty.

6 Click on the pull-down arrow at the end of the **Form:** field.

- A list of available forms is displayed.

7 In the displayed list of forms, click on the name of the form for which field permissions are to be defined or changed.

- The selected name is displayed in the **Form:** field and current permission settings for the selected form are displayed in the fields below, showing:
  - *No Permission* (i.e., a list of fields for which the group currently has no access).
  - *Permission to View* and able to be set by the administrator for permission to change (i.e., marked with the icon as viewable but currently not able to be changed by users in the selected group).
  - *Permission to View* only (i.e., marked with the icon as viewable only, typically because it is a button or other field with no modifiable data).

– *Permission to Change* (i.e., marked with the icon as able to be viewed and changed by users in the selected group).

8 If desired, fields may be moved between the **Permission** and **No Permission** lists by clicking a field name to highlight it and then using the **Add>>>** or **<<<Remove** button as appropriate to implement the move. It is also possible to **Add All>>>** remaining items from the **No Permission** list or **<<<Remove All** items from the **Permission** list using the appropriate button.

- Any moved items appear in the list to which they were moved and do not appear in the list from which they were moved. Each item moved to the **Permission** list is marked as viewable (i.e., the icon appears in front of it).

9 If desired, an item in the **Permission** list may be changed from "viewable" to "able to be changed" or the reverse by clicking on its icon to display the View Change choice and then clicking on Change or View as appropriate.

- The appropriate icon (or) is displayed in front of the item in the list, indicating that members of the group will have the ability to change data in that field when working with the form in the **User** tool, or that they will only be able to view the data.

10 Click on the **Apply** button.

- Any changes are implemented and the **Apply** button is grayed out.

11 Follow menu path **File → Exit**.

- The **Remedy Administration** tool is closed.

Generating Trouble Ticket Reports

A set of predefined reports is available through Remedy. These reports are trouble ticket administrative reports generated for local and system-wide usage. There are several types of predefined reports, including:

- Assigned-to Report – provides a report of the number of Tickets assigned to technicians.
- Average Time to Close TTs – provides a report of the average time to close trouble tickets.
- Hardware Resource Report – provides a report sorted and grouped by Hardware Resources and Closing Codes.

- Number of Tickets by Status – provides the number of Trouble Tickets grouped by Status.
- Number of Tickets by Priority – provides the number of Trouble Tickets grouped by assigned priority.
- Review Board Report – provides a report of the details of TTs for the TT Review Board.
- SMC TT Report – provides a report to be sent to the SMC.
- Software Resource Report – provides a report sorted by Software Resources and their Closing Codes.
- Submitter Report – indicates by submitter the number and type of trouble tickets in the system.
- Ticket Status Report – provides a report sorted and grouped by Ticket Status.
- Ticket Status by Assigned-to – provides a report sorted and grouped by the last person assigned to a Trouble Ticket.

Most of the time, you will probably select a report from the list, using the **Report** window illustrated in Figure 40. If you need a custom report, it would be possible to select data from the database and create a report using an appropriate separate software application (e.g., a spreadsheet program).

Suppose you want to print a report on one of the provided custom reports, Ticket Status Report. Use the following procedure to create and print the report.

Using a Custom Report

1 On the MSS applications server (e.g., **e0mss21**, **g0mss21**, **l0mss21**, **n0mss21**), start the Remedy Trouble Ticket user application (i.e., in the application directory **/usr/ecs/<*MODE*>/COTS/remedy/bin**, where **<*MODE*>** is likely to be OPS, TS1, or TS2, enter the command **aruser &**).

- A Remedy Action Request System logo window is displayed briefly, followed by a Remedy initial screen from which a number of custom application forms, including the Trouble Ticket application, may be launched.

2 Follow menu path **File→Open** or click on the leftmost button near the top of the window.

- The **Open** dialog box is displayed, showing choices including: **RelB-Contact Log**, **RelB-TT-ForwardToSite**, **RelB-TroubleTickets**, and **RelB-TT-ForwardToSMC**.

3 Click on **RelB-Trouble Tickets** to highlight it and then click on the **Search** button.

- The **Search RelB-TroubleTickets** window is displayed; the fields are empty.

4 Define the search criteria to be applied to the search by typing entries in fields in the **Search RelB-TroubleTickets** window. (In this case, request all trouble tickets by clearing all fields and leaving the search window blank.)

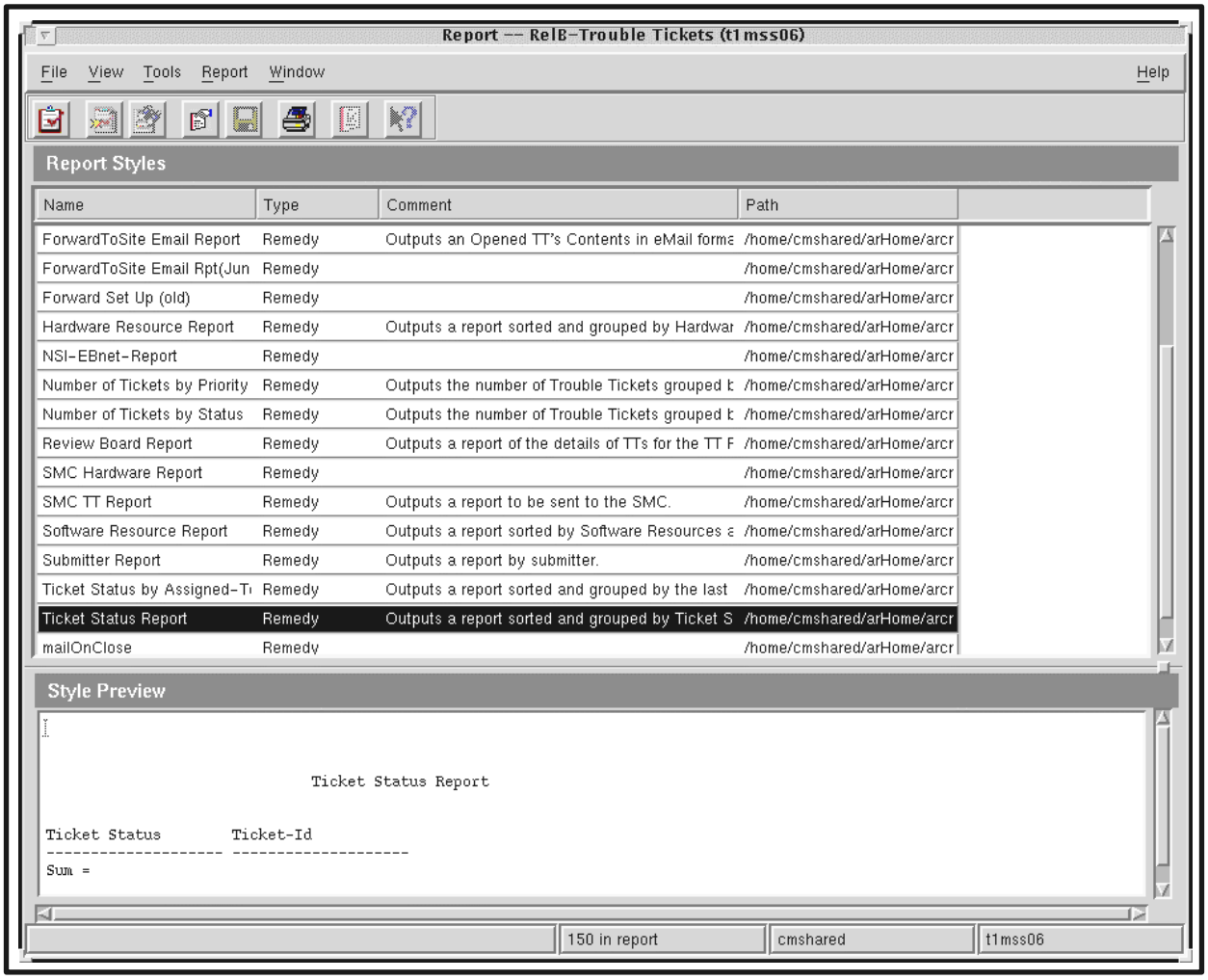

Figure 40. Remedy Report Window

5 Follow menu path **Actions→Search** (or click on the **Search** button near the upper right corner of the window).

- Remedy displays the **Modify RelB-TroubleTickets** window; the fields are empty and a list of all trouble tickets in the database is available near the top of the window. You can modify the size of this list field by moving the short horizontal control bar at the right side of the window sash under the field.

6 To select (highlight) the trouble tickets for which the report is to be printed, click on those to be selected; in this case, to select all tickets, click on the first one in the list, then scroll to the bottom of the list (using the scroll bar at the right if necessary), and then shift-click on the last ticket listed (with the cursor over the last ticket listed, hold down the shift key and click the left mouse button).

- The selected trouble tickets (in this case, all tickets) are highlighted.

7 From the Trouble Ticket main window in the User Tool, follow menu path **Tools→Reporting . . .** .

- The **Report--RelB-TroubleTickets (<*hostname*>)** dialog box appears.

8 Select (highlight) the report you want from the **Report Styles** list (see Figure 40) by clicking on the report name (in this case, **Ticket Status Report**).

- The **Report Styles** list contains all defined custom reports.
- The custom report **Ticket Status Report** is highlighted with the style preview visible in the **Style Preview** window (see Figure 40).

9 Follow menu path **Report→Print . . .** .

- The **Print** dialog box appears.

10 Specify whether you want to use the default printer or a specific printer by selecting from the drop-down list accessible with a click on the arrow at the right side of the **Printer Name** field.

- The selected printer is identified in the **Printer Name** field.

11 Select the desired **Number of Copies**, using the arrows to the right of the **Number of Copies** field to increase or decrease the number displayed in the field.

- The selected number is displayed in the **Number of Copies** field.

12 Click on the **OK** button to send your report to the printer.

- The specified report is printed using the instructions entered in the **Print** dialog box.

Performing Operational Work-around

An operational work-around is a temporary modification to operations and user procedures that is entailed by resolution of a trouble ticket. It is characterized by several factors that may affect the way in which procedures are accomplished to conduct operations during the period of temporary inability to conduct operations using normal procedures:

- managed by the Operations Coordinator at each center.
- master list of work-arounds and associated trouble tickets and configuration change requests (CCRs) kept in either hard-copy or soft-copy form for the operations staff.

- hard-copy and soft-copy procedure documents are “red-lined” for use by the operations staff.
- work-arounds affecting multiple sites are coordinated by the site organizations and monitored by EMD Project staff.

The work-around is removed when the CCR that corrects the original problem is installed into the operational baseline.

This page intentionally left blank.

Practical Exercise

Introduction

This exercise is designed to practice key elements of the System Troubleshooting procedures. Perform the tasks identified in the exercise.

Equipment and Materials

One workstation, a copy of 625-EMD-017, *EMD Training Material Volume 17: System Troubleshooting*, a copy of 611-EMD-001, *Release 7.10 Mission Operation Procedures for the EMD Project*, and a copy of 609-EMD-001, *Release 7.10 Operations Tools Manual for the EMD Project*.

Perform Activities Related to System Monitoring and Troubleshooting

1. Use system tools to perform system monitoring activities, including WhatsUp Gold, Whazzup???, and ECS Assistant Server Monitor for checking the health and status of the network, ECS Health Check GUI to monitor the status of the EcDmV0ToEcsGateway and the Data Pool, and the web browser to access the EMSn Web Page.
2. Examine the WhatsUp Gold Event Log for event notifications.
3. Use Whazzup??? to view the status of servers in a subsystem. Use Whazzup??? to view the status of all servers in the OPS mode; use Whazzup??? to identify what servers are down in all modes.
4. Locate and review Debug.log and .ALOG files for SDSRV, ADSRV, SBSRV, DDICT, V0GTWY, INGST, Archive Server, STMGT, and PLANG.
5. Locate and review the STMGT Request Manager Debug log.
6. Check mount points for PDPS on hosts for SDSRV and Archive Server.
7. Launch the Spatial Subscription Server GUI and create a standard subscription for FtpPush of a small data file; use the GUI to view the subscription.
8. Launch the SDSRV GUI and review the ESDTs listed on the Data Types tab.
9. Check the SDSRV cfg directory for *.evt files.
10. List the contents of the Archive directory.
11. On host *x*0drg01, check the drp-mounted staging disk.
12. Launch Netscape and the Data Pool Web Access Tool; search and download a science data granule from the Data Pool.
13. Launch the Remedy User tool and add a user to Remedy. Assign the user to at least two groups.

14. Launch the Remedy Administration tool and change the privileges of the user you added in two ways: first, change the list of forms seen in the Open dialog of the User tool by users in at least one of the groups to which the user is assigned; then, change the field access privileges on one of the forms accessible to one of the groups to which you assigned the user.

Slide Presentation

Slide Presentation Description

The following slide presentation represents the slides used by the instructor during the conduct of this lesson.

This page intentionally left blank.